CH32H417/H416/H415 Datasheet

V1.3

https://wch-ic.com

Overview

CH32H417 is an interconnected general-purpose microcontroller designed based on QingKe RISC-V5F and RISC-V3F dual cores. CH32H417 integrates USB 3.2 Gen1 controller and transceiver, 100M Ethernet MAC and PHY, SerDes high-speed isolated transceiver, Type-C/PD controller and PHY, provides SD/EMMC controller, 500MBytes universal high-speed interface UHSIF, DVP, SWPMI, PIOC, FMC, DFSDM, LTDC, GPHA, DMA Controller, multi-timers, 8 UARTs, I3C, 4 groups of I2C, 2 groups of QSPI, 4 groups of SPI, 2 groups of I2S, 3 groups of CAN and other peripheral resources. Built-in 5M sampling rate dual 12-bit ADC unit, 20M sampling rate 10-bit high-speed HSADC unit, 16-channel touch-key, dual DAC unit, 3 groups of OPA, voltage CMP and other analog resources, support 10M/100M Ethernet communication. It supports USB 2.0 and USB 3.0, USB Host and USB Device, Type-C and PDUSB fast charging, SerDes high-speed isolation and remote transmission, and dual-core division of labor to improve the efficiency of network protocol processing and communication response speed.

Feature

- **Core**
  - Dual-core structure: QingKe RISC-V5F and RISC-V3F
  - Fast programmable interrupt controller + hardware interrupt stack
  - V5F up to 400MHz, V3F up to 150MHz
- **Memory**
  - 896KB volatile data storage area SRAM (include 128KB ITCM and 256KB DTCM)
  - 960KB program memory area CodeFlash
  - 56KB System BootLoader storage area
  - 256B user-defined information storage area
- **Power management and low-power:**
  - System power supply V_{DD33} rated: 3.3V
  - Regular GPIO power supply V_{DDIO}, rated 3.3V, supports 1.8V
  - High-speed GPIO supply V_{IO18}, selectable 1.2/1.8/2.5/3.3V
  - V_{BAT} power supply independently powering RTC, LSE
  - Low-power modes: Sleep, Stop
- **System clock and reset:**
  - Built-in factory-adjusted 25MHz RC oscillator
  - Built-in RC oscillator of about 40kHz
  - High-speed oscillator supports external 25MHz crystal
  - Low-speed oscillator supports external 32kHz crystal
  - Power-on/power-off reset, programmable voltage monitor
- **2 groups of 16 general DMA controllers:**
  - A total of 16 channels, supporting ring buffer management
- **2 groups of 12-bit ADC:**
  - Analog input range: V_{SS}~V_{DDIO}
  - 16 external signal channels +2 internal signal channels
  - The sampling rate is up to 5Msps, supports dual ADC
- **16-bit TouchKey channel detection**
- **1 group of 10-bit HSADC:**
  - Analog input range: V_{SS}~V_{DDIO}
  - 7 external signal channels
  - Sampling rate up to 20Msps
- **2 groups of 12-bit DAC**
- **32-bit width 125MHz Universal High-speed Interface UHSIF**
- **150MHz DVP**
- **200MHz double-edge SD/EMMC controller (SDMMC)**

- **SDIO master/slave interface: support SD/SDIO/MMC port**
- **1-wire protocol main interface SWPMI**
- **Programmable protocol I/O controller PIOC:**
  - Programmable, supporting a variety of 1-wire/2-wire interfaces.
  - Support 1-wire RGB chip multi-stage series connection
- **Ethernet controller MAC and 10M/100M PHY:**
  - MAC and 100M PHY are fully integrated, and the periphery only needs capacitance
  - Support Auto-MDIX line automatic conversion and polarity adaptation
  - Provide RGMII interface, which can connect external 1000M PHY.
  - Built-in pre-assigned globally unique MAC address
- **5Gbps SuperSpeed USB 3.0 controller and PHY**
  - Support SuperSpeed Host and Device modes
  - Support drive USB 3.0 HUB
  - High-speed integrated design, measured 450Mbytes per second.
- **480Mbps high-speed USB 3.0 controller and PHY**
  - Support high-speed/full-speed Host and Device modes
  - Support 1024-byte packets
  - Support USART or I2C pin mapping
- **Full-speed USB 2.0 controller and PHY**
  - Support full-speed/low-speed Host and Device mode
  - Support OTG function
- **Remote SerDes controller and PHY**
  - Support high-voltage signal isolation transmission at kilovolt level
  - Support 100 meters of differential network cable remote transmission
- **Random Number Generator RNG**
- **USB PD and Type-C controller and PHY**
  - Support DRP, Sink and Source application, support PDUSB
  - Support PD3.2 and EPR, support 100W or 240W fast charging
- **Analog voltage comparator CMP**
  - 2 input channels, output to peripherals or I/O
- **3 groups of OPA/PGA/CMP**
  - Multiple input channels and output channels
  - Low dropout voltage, multi-step gain, support high-speed mode
- **Multi-group timers:**
  - 2×16-bit advanced timers
  - 4×16-bit and 4×32-bit general-purpose timers
  - 2×16-bit Basic Timers
  - 2×16-bit low-power timers
  - 2 Watchdog timers: (independent watchdog and window watchdog)
  - 2×32-bit SysTick
- **RTC: 32-bit independent timer**
- **8 groups of USART: Support LIN**
- **4 groups of I2C interfaces**
- **I3C interface**
- **4 groups of SPI interfaces (SPI2, SPI3 for I2S1, I2S2)**
- **2 groups of QuadSPI interfaces**
- **3 groups of CAN interfaces (2.0B active)**
- **Digital Filter for ΣΔ Modulator DFSDM**
- **Serial Audio Interface SAI**
- **LCD-TFT Display Controller LTDC**
- **Graphics Processing Hardware Accelerator GPHA**
- **Flexible Memory Controller FMC:**
  - Support FSMC interface and SDRAM interface.
  - Support external expansion of low-cost PSRAM.
- **Fast GPIO port:**
  - 6 groups of GPIO ports, 95 I/O ports
  - Mapping 16 external interrupts
- **ECDC encryption module:**
  - Support AES128/192/256 algorithm
  - Support SM4 algorithm
- **Debug mode:**
  - Support 1-wire (default) and 2-wire debugging modes
- **Package form: QFN**

Product model / Resource differences		CH32H417			CH32H416	CH32H415
		QEU6	MEU6	WEU6	RDU6	REU6
Chip pin number		128	88	68	60	60
Nonzero wait Code FLASH		960KB	960KB	960KB	480KB	960KB
SRAM	Core 1 HS ITCM	128KB	128KB	128KB	128K	128KB
	Core 1 HS DTCM	256KB	256KB	256KB	256K	256KB
	Shared code and data area	512KB	512KB	512KB	512K	512KB
GPIO port number		95	65	50	48	54
Timer	ADTM (16-bit)	2	2	2	2	2
	GPTM (16-bit)	4	4	4	4	4
	GPTM (32-bit)	4	4	4	4	4
	Basic (16-bit)	2	2	2	2	2
	LPTIM	2	2	2	2	2
	Watchdog	WWDG+IWDG			WWDG+IWDG	WWDG+IWDG
	SysTick 32-bit	2	2	2	2	2
RTC		√	√	√	√	√
ADC/ TKey	Units	2	2	2	2	2
	Channels	16+4	9+4	7+4	16+4	15+4
HSADC	Units	1	1	1	1	1
	Channels	7	4	4	7	4
DAC (Unit)		2	2	1 (DAC2)	2	2
OPA		3	2 (OPA1/3)	2 (OPA1/3)	3	2 (OPA1/3)
CMP		1	1	1	1	1
DFSDM		1	1	1	1	1
RNG		1	1	1	1	1
LTDC		1	1	1	1	1
GPHA		1	1	1	1	1
DVP		1	1	1	1	1
USART		8	8	7	7	8
SPI/I2S		4/2	4/2	3/2	3/2	4/2
QSPI		2	1 (QSPI2)	1 (QSPI2)	1 (QSPI2)	-
I2C		4	4	4	4	4
I3C		1	1	1	1	1
UHSIF		1	1	1(1)	-	-
CAN(5)		3	3	3	3	3
SDIO		1	-	-	-	1
SDMMC		1	1	1	1	-
SAI		1	1	1	1	1
SWPMI		1	1	1	1	1
PDUSB	USBFS/OTG_FS	1	1	-	1	1
	USBHS (USB	1	1	1	1	1

Product model / Resource differences		CH32H417			CH32H416	CH32H415
		QEU6	MEU6	WEU6	RDU6	REU6
	2.0)					
	USBSS (USB 3.0)	1	1	1	1	-
	USBPD Type-C	1	1	-	1 Built-in Rd(4)	1
SerDes(4)		1	1	-	-	-
Ethernet(5)		MAC+10/100M PHY	MAC+10/100M PHY	MAC+10/100M PHY	-	-
FMC	FSMC	1	1(2)	1(2)	-	-
	SDRAM	1	1	1(3)	-	-
PIOC		1	1	1	1	1
Package form		QFN128	QFN88	QFN68	QFN60X6	QFN60X6

Note:

1. Incomplete, only supports most functions.

2. Incomplete, only supports 8-bit and 16-bit.

3. Incomplete, only supports 8-bit and 16-bit.

4. CH32H416RdU6 has a controllable RD pull-down resistor defined by the Type-C specification, which is about 5.1kΩ.

5. For products with lot number 5 bit 0, GPHA, Ethernet, SerDes, CAN functions are not provided.

Chapter 1 Specification Information

1.1 System Structure

The microcontroller is designed on the basis of the RISC-V instruction set, and its architecture integrates 2 QingKe microprocessor cores, arbitration unit, DMA module, SRAM storage and other components through multiple bus groups to achieve interaction. A general-purpose DMA controller is integrated to reduce the CPU load and improve access efficiency, and a multi-level clock management mechanism is applied to reduce the power consumption of peripherals, while both the data protection mechanism, the clock automatically switches to protect the measures to increase system stability. The following diagram shows the overall internal architecture of the series chip.

Figure 1-1-1 CH32H417 system block diagram

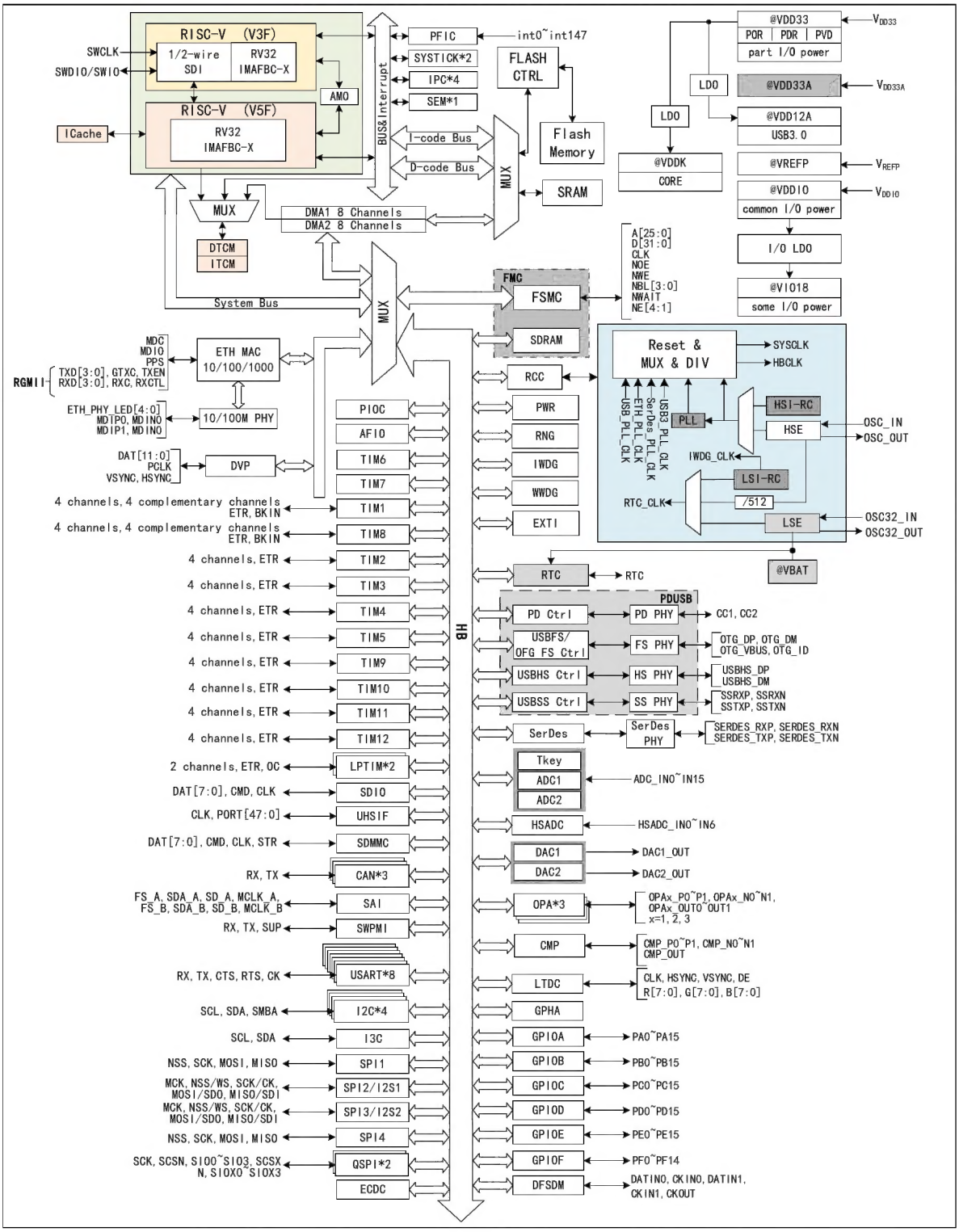

Figure 1-1-2 CH32H416 system block diagram

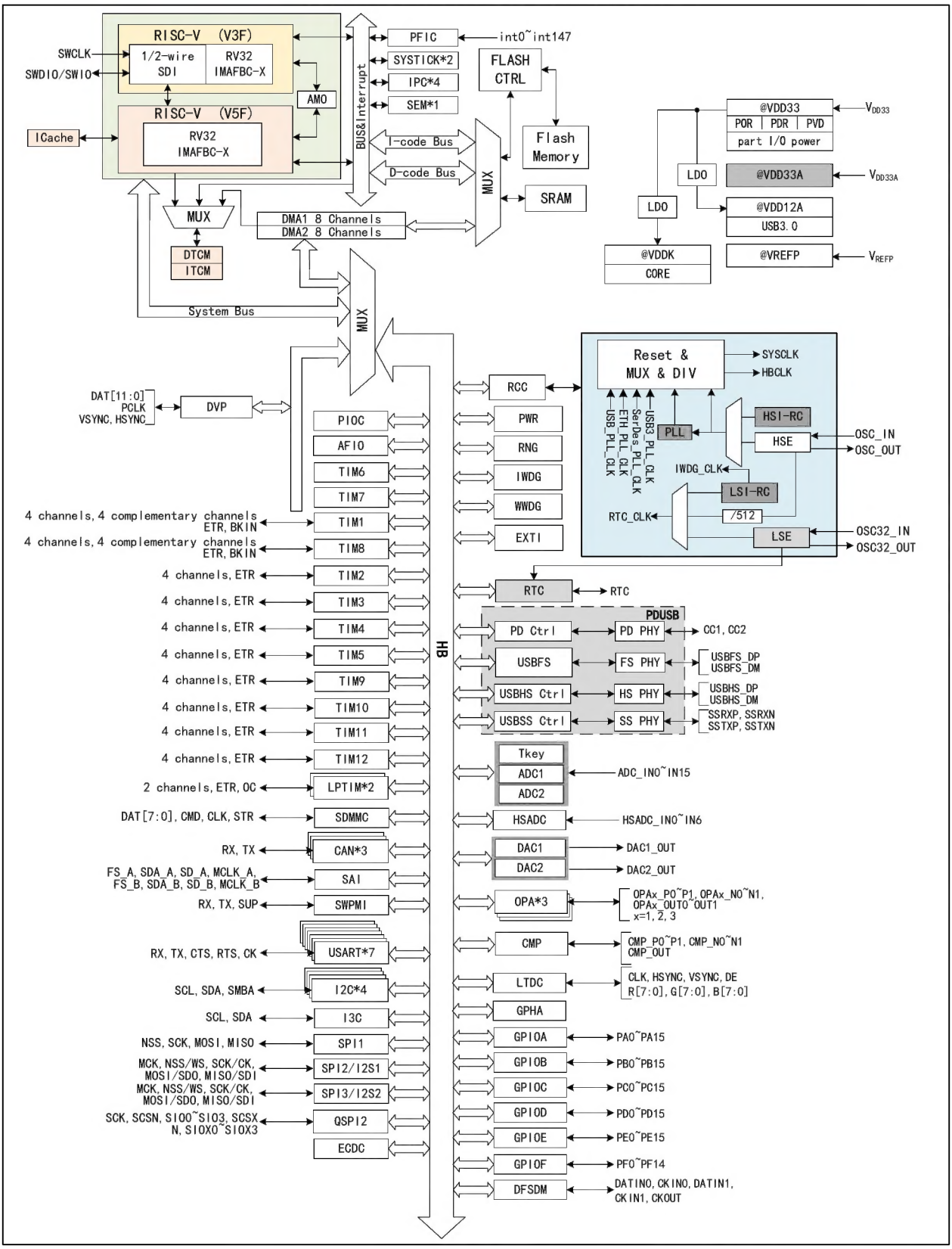

Figure 1-1-3 CH32H416 system block diagram

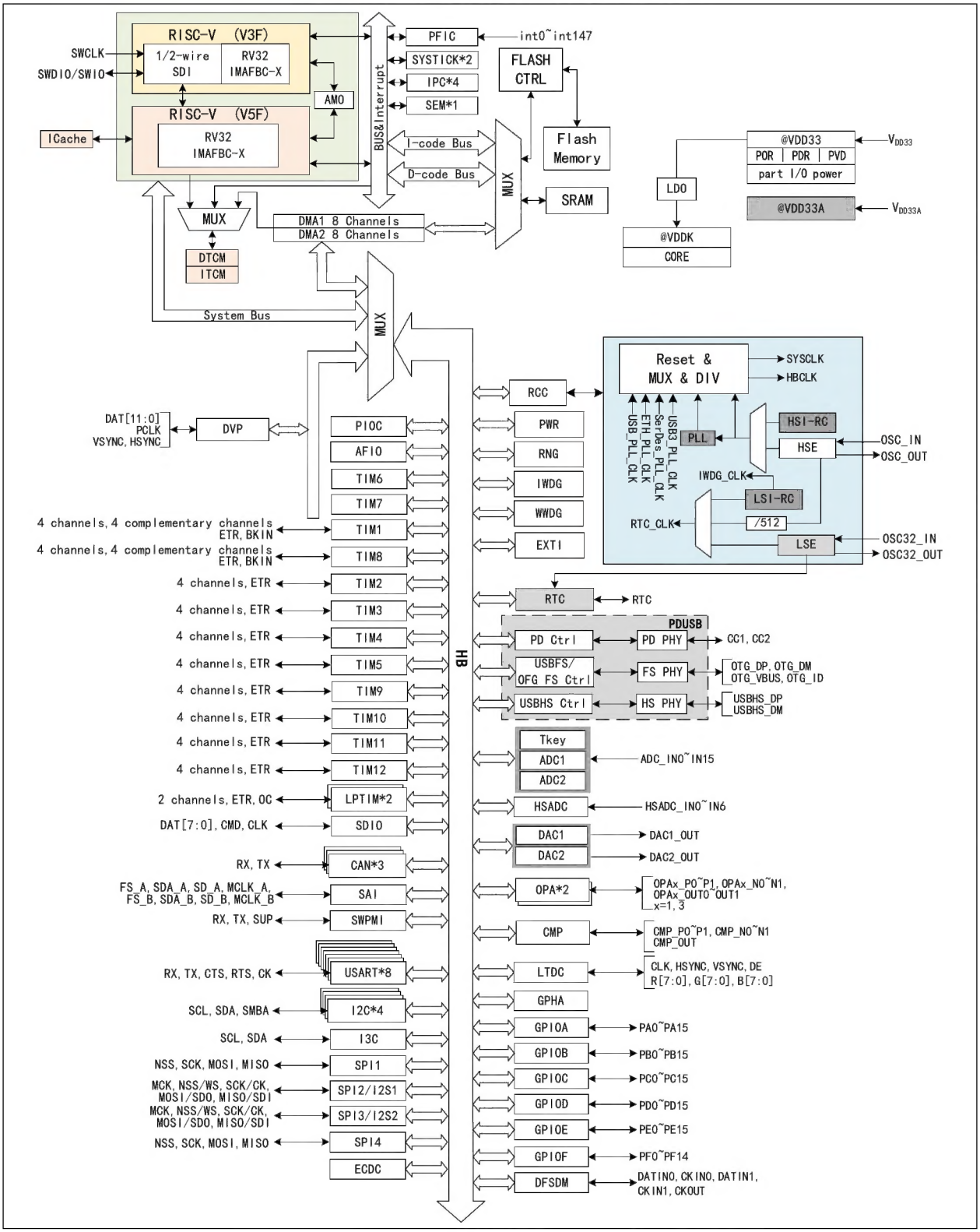

1.2 Memory Map

Figure 1-2 Memory address map

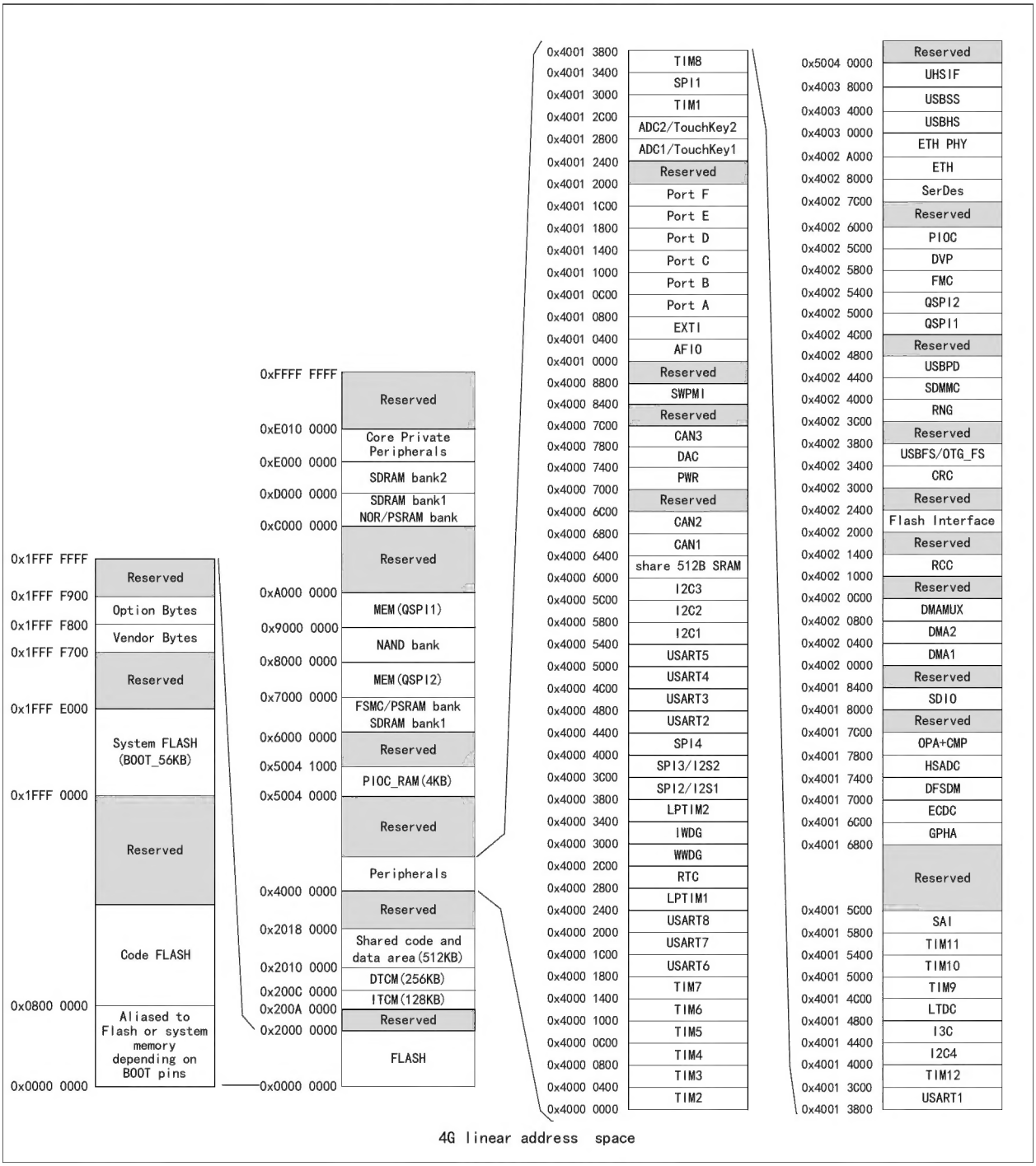

1.3 Clock Tree

4 groups of clock sources are introduced into the system: internal high frequency RC oscillator (HSI), internal low frequency RC oscillator (LSI), external high frequency oscillator (HSE), external low frequency oscillator (LSE).

Figure 1-3 Clock tree block diagram

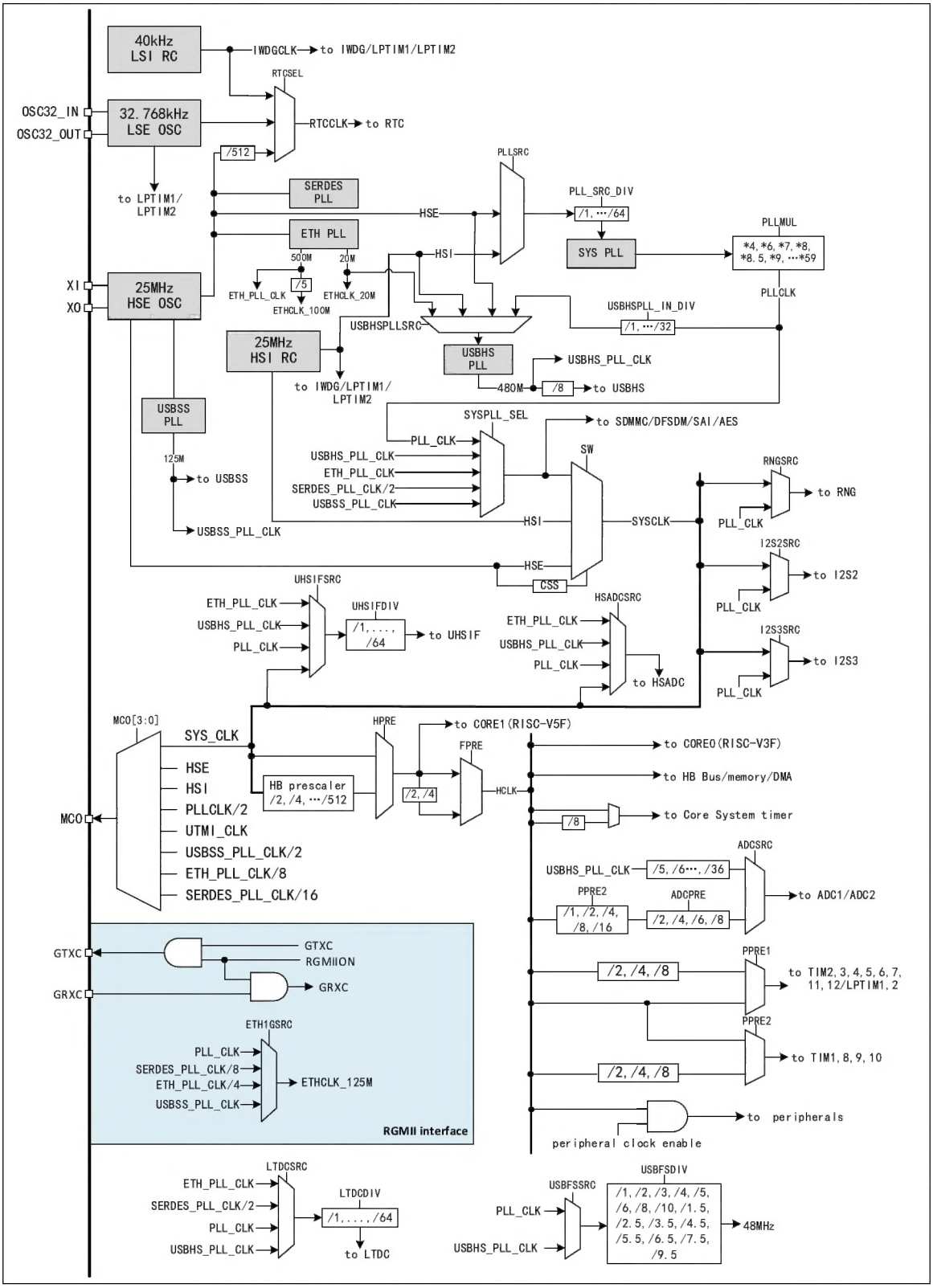

1.4 Functional Description

1.4.1 Dual Core: RISC-V5F Processor and RISC-V3F Processor

The chip integrates a dual core architecture: RISC-V5F (CORE1) and RISC-V3F (CORE0). Both processors support the instruction set RV32IMAFBC-X, are internally managed in a modular fashion, and contain units such as the fast programmable interrupt controller PFIC, memory protection, branch prediction mode, and extended instruction support. Externally multiple buses are connected to external unit modules to enable interaction between external function modules and the core.

The processor with its minimal instruction set, multiple operating modes, and modular custom extensions can be flexibly applied to different scenarios of microcontroller design, such as small area low-power embedded scenarios, high performance application operating system scenarios, etc.

RISC-V5F processor:

- Disordered multi-transmit architecture
- Built-in 32KB instruction cache
- High main frequency, high performance, focus on computing
- Provide a non-maskable interrupt NMI
- 4-channel Physical Memory Protection (PMP)
- 4-channel hardware breakpoints
- 8-level interrupt nesting
- Programmable Fast Interrupt Controller (PFIC)
- Custom extension Instructions
- Hardware Stacks

RISC-V3F processor:

- Sequential single-transmit architecture
- 3-stage pipeline
- Low mains frequency, low-power consumption, focus on control
- Provide a non-maskable interrupt NMI
- 2-level interrupt nesting
- Programmable Fast Interrupt Controller (PFIC)
- Custom extension instructions
- Hardware Stacks

1.4.2 On-chip Memory

Built-in SRAM with a total capacity of 896K bytes, partly used in data area and partly used in zero-waiting code area, data is lost after power failure. The SRAM is divided into 3 blocks: 128KB ITC core 1 tightly coupled zero wait code area, 256KB DTCM core 1 tightly coupled zero wait data area, and the remaining 512KB shared code and data area. In addition, the core 1 also has a 32KB high-speed instruction cache.

The 512KB shared area can be configured as zero-waiting code area and data area of RISC-V3F, and it is suggested to allocate it flexibly in units of 128KB as required.

As an option, 128KB of ITCM and 256KB of DTCM, totaling 384KB, can be configured as the code area of RISC-V5F, in which DTCM as the code area will increase one clock waiting when a jump occurs.

RISC-V3F can wait for access to ITCM or DTCM according to HCLK clock.

RISC-V5F and RISC-V3F can wait for access to the 512KB shared area according to HCLK clock zero.

Built-in 256-byte system nonvolatile configuration information storage area is used to store the manufacturer's configuration words, which are solidified before leaving the factory and cannot be modified by users.

Built-in 256-byte user-defined information storage area for user option bytes storage.

The sizes of user area and BOOT area are read by the DBMODE bit in R32_FLASH_CFGR0 register:

When DBMODE=1: Built-in 960K byte non-zero waiting program flash memory area (Code FLASH), that is, the user area, is used for user application and constant data storage, with an equivalent frequency of about 25MHz. Built-in maximum 56K byte system storage area (System FLASH), i.e. BOOT area, is used for system bootstrap storage, and a built-in bootloader loader.

When DBMODE = 0: Built-in 480K bytes non-zero wait program flash memory storage area (Code FLASH), i.e., user area, for user's application program and constant data storage, equivalent frequency is about 12.5MHz. built-in maximum 28K bytes system storage area (System FLASH), i.e., BOOT area, for system boot program storage, built-in bootloader.

1.4.3 Power Supply Scheme

(1) CH32H417

- V_{DD33} = 2.4~3.6V: To power some I/O pins and system voltage regulator LDO, including built-in USB2.0 and Ethernet PHY. At the same time, V_{DD33} supplies power to the built-in system voltage regulator LDO and outputs a regulated power supply on the V_{DD12A} and V_{DDK} pins. It is recommended to connect 0.1uF high-frequency capacitors to each externally. The main V_{DD33} (adjacent to the Ethernet signal pin) also needs to be connected to another 4.7uF capacitor in parallel. When used for USB2.0 or Ethernet, the V_{DD33} range is recommended to be 3.2~3.45V.
- V_{DD33A} = 1.8~3.6V: To power the analog part of ADC, temperature sensor, HSADC, OPA, CMP, DAC and PLL, it is recommended to connect an external high-frequency capacitor with 0.1uF capacity. When using OPA or DAC, V_{DD33A} and V_{DDIO} are recommended to be the same voltage; when not using OPA or DAC, V_{DD33A} can be higher than V_{DDIO} voltage. V_{DD33A} is recommended to be not less than 3.0V when using HSADC, and not less than 2.4V when using ADC and DAC.
- V_{DD12A} = 1.18~1.28V: To power the built-in USB 3.0 module, it is recommended to connect an external 0.1uF parallel 4.7uF capacity high frequency capacitor. During normal operation, the VDD12A voltage is generated by the system voltage regulator LDO powered by VDD33. In order to minimize the heat generated by the LDO of the chip, it can be supplied with an external power supply (which can be generated by an external DC-DC), and it is recommended that the external voltage be slightly higher than the output voltage of the internal LDO.
- V_{DDIO} = 1.8~3.6V: Power supply for some of the regular I/O pins determines the pin output high voltage amplitude, at the same time, V_{DDIO} through the built-in I/O pins LDO regulator power supply in the V_{IO18} pin output regulated power supply, it is recommended that each external 0.1uF high-frequency capacitance, the main V_{DDIO} (adjacent to the V_{IO18}) also need to be another 4.7uF capacitor connected in parallel. the V_{DDIO} voltage cannot be higher than the V_{DD33} voltage, and V_{DDIO} voltage cannot be higher than V_{DD33A} voltage.
- V_{IO18} = 1.1~3.6V: Power supply for some of the high-speed I/O pins determines the pin output high-voltage amplitude, it is recommended that each external 0.1uF high-frequency capacitor, the main V_{IO18} (adjacent to

V_{DDIO}) also need to be connected in parallel with another 4.7uF capacitor. During normal operation, the V_{IO18} voltage is generated by the I/O pin LDO regulator powered by V_{DDIO} and can be dynamically configured by software to 1.2V, 1.8V, 2.5V, 3.3V or off; the default voltage of the V_{IO18} after power-up can be selected by the pull-down resistor connected externally to the XO pin, refer to Table 3-2; when there is no need to support the low-voltage, the V_{IO18} can be shorted fixedly to the V_{DDIO}.

- V_{REFP} = 2.4~3.6V: For the reference voltage of ADC, HSADC, DAC, it is recommended to connect an external high-frequency capacitor with 0.1uF capacity. V_{REFP} must not be higher than V_{DD33A} voltage.
- V_{BAT} = 1.8~3.6V: Optional backup power supply, when V_{DD33} and V_{DD33A} are turned off, the internal power switcher switches V_{BAT} to be used to power the RTC, external low frequency oscillator alone.
- V_{DDK} = 1.17~1.27V: To power the core circuits, it is recommended that each be externally connected to a 0.1uF high-frequency capacitor, and that an additional 4.7uF capacitor be connected in parallel to the main V_{DDK} (adjacent to V_{DD33}). During normal operation, the V_{DDK} voltage is generated by the system voltage regulator LDO powered by V_{DD33}. In order to minimize the heat generated by the LDO of the chip, this power supply can be supplied externally (it can be generated by an external DC-DC), and it is recommended that the voltage supplied externally be slightly higher than the value of the output voltage of the internal LDO.

The above power supply pins with the same name must be shorted, voltage relationship: $V_{DD33} \geq V_{DD33A} \geq V_{DDIO} \geq V_{IO18}$; and $V_{DD33A} \geqslant V_{REFP}$.

(2) CH32H416

- V_{DD33} = 2.4~3.6V: To power some I/O pins and system voltage regulator LDO, including built-in USB2.0 and Ethernet PHY. At the same time, V_{DD33} supplies power to the built-in system voltage regulator LDO and outputs a regulated power supply on the V_{DD12A} and V_{DDK} pins. It is recommended to connect 0.1uF high-frequency capacitors to each externally. The main V_{DD33} (adjacent to the Ethernet signal pin) also needs to be connected to another 4.7uF capacitor in parallel. When used for USB2.0 or Ethernet, the V_{DD33} range is recommended to be 3.2~3.45V.
- V_{DD33A} = 1.8~3.6V: To power the analog part of ADC, temperature sensor, HSADC, OPA, CMP, DAC and PLL, it is recommended to connect an external high-frequency capacitor with 0.1uF capacity. When using HSADC, it is recommended that V_{DD33A} should not be less than 3.0V, and when using ADC and DAC, V_{DD33A} should not be less than 2.4V.
- V_{DD12A} = 1.18~1.28V: To power the built-in USB 3.0 module, it is recommended to connect an external 0.1uF parallel 4.7uF capacity high frequency capacitor. During normal operation, the V_{DD12A} voltage is generated by the system voltage regulator LDO powered by V_{DD33}. In order to minimize the heat generated by the LDO of the chip, it can be supplied with an external power supply (which can be generated by an external DC-DC), and it is recommended that the external voltage be slightly higher than the output voltage of the internal LDO.
- V_{REFP} = 2.4~3.6V: For the reference voltage of ADC, HSADC, DAC, it is recommended to connect an external high-frequency capacitor with 0.1uF capacity. V_{REFP} must not be higher than V_{DD33A} voltage.
- V_{DDK} = 1.17~1.27V: To power the core circuits, it is recommended that each be externally connected to a 0.1uF high-frequency capacitor, and that an additional 4.7uF capacitor be connected in parallel. During normal operation, the V_{DDK} voltage is generated by the system voltage regulator LDO powered by V_{DD33}. In order to minimize the heat generated by the LDO of the chip, this power supply can be supplied externally (it can be generated by an external DC-DC), and it is recommended that the voltage supplied externally be slightly higher than the value of the output voltage of the internal LDO.

The above power supply pins with the same name must be shorted, voltage relationship: $V_{DD33} = V_{DD33A}$ and $V_{DD33A} \geq V_{REFP}$.

(3) CH32H415

- V_{DD33} = 2.4~3.6V: To power some I/O pins and system voltage regulator LDO, including built-in USB2.0. At the same time, V_{DD33} supplies power to the built-in system voltage regulator LDO and outputs a regulated power supply on the V_{DD12A} and V_{DDK} pins. It is recommended to connect 0.1uF high-frequency capacitors to each externally. The main V_{DD33} (adjacent to the V_{DDK}) also needs to be connected to another 4.7uF capacitor in parallel. When used for USB2.0 or Ethernet, the V_{DD33} range is recommended to be 3.2~3.45V.
- V_{DD33A} = 1.8~3.6V: To power the analog part of ADC, temperature sensor, HSADC, OPA, CMP, DAC and PLL, it is recommended to connect an external high-frequency capacitor with 0.1uF capacity. When using HSADC, it is recommended that V_{DD33A} should not be less than 3.0V, and when using ADC and DAC, V_{DD33A} should not be less than 2.4V.
- V_{DDK} = 1.17~1.27V: To power the core circuits, it is recommended that each be externally connected to a 0.1uF high-frequency capacitor, and that an additional 4.7uF capacitor be connected in parallel. During normal operation, the V_{DDK} voltage is generated by the system voltage regulator LDO powered by V_{DD33}. In order to minimize the heat generated by the LDO of the chip, this power supply can be supplied externally (it can be generated by an external DC-DC), and it is recommended that the voltage supplied externally be slightly higher than the value of the output voltage of the internal LDO.

The above power supply pins with the same name must be shorted, voltage relationship: $V_{DD33} = V_{DD33A}$.

1.4.4 Power Supply Detector

The power-on reset (POR)/ power-off reset (PDR) circuit is integrated in the chip, which is always in working state. When V_{DD33} is lower than the set threshold ($V_{POR/PDR}$), the device is placed in a reset state without using an external reset circuit.

In addition, the system has a programmable voltage monitor (PVD), which needs to be turned on by software to compare the voltage magnitude of the V_{DD33} supply with the set threshold V_{PVD}. Refer to Chapter 3 for $V_{POR/PDR}$ and V_{PVD} values.

1.4.5 System Voltage Regulator LDO

After resetting, the system voltage regulator is automatically switched on. There are 2 modes of operation depending on the application mode.

- On mode: Normal running operation, providing stable core power.
- Low-power mode: Low-power operation of the regulator when the CPU is in Standby mode.

1.4.6 Low-power Mode

The system supports 2 low-power modes, which can achieve the best balance under the conditions of low power consumption, short start-up time and multiple wake-up events.

- Sleep mode (SLEEP)

In sleep mode, only the CPU clock stops, but all peripheral clocks are powered normally and the peripherals are in working state. This mode is the shallowest low-power mode, but can achieve the fastest wake-up.

Exit condition: Any interruption or wake-up event.

- Stop mode (STOP)

The stop mode combines the clock control mechanism of peripherals on the basis that both cores V3F and V5F go into deep sleep, and makes the voltage regulator run in a lower power consumption state.

Both V3F and V5F enter this mode: the high frequency clock (HSE/HSI/PLL) domain is turned off, the contents of SRAM and register are kept, and the state of I/O pin is kept. The system can continue to run after this mode wakes up, and HSI is the default system clock.

Exit conditions: any wake-up event (EXTI signal), external reset signal on RST and IWDG reset. Among them, EXTI signal includes one of 95 external I/O ports, RTC alarm clock, SWPMI wake-up signal, LPTIM wake-up signal, I3C wake-up signal, USART wake-up signal, USBPD wake-up signal, Ethernet wake-up signal, USBFS wake-up signal and USBHS wake-up signal.

1.4.7 CRC Calculation Unit

The CRC (Cyclic Redundancy Check) Calculation Unit generates a CRC code from a 32-bit data word using a fixed polynomial generator. In numerous applications, CRC-based techniques are used to verify the consistency of data transmission or storage. Within the scope of the EN/IEC 60335-1 standard, which provides a means of detecting errors in flash memory, the CRC calculation unit can be used to compute the signature of software in real time and compare it with the signature generated at the time of linking and generating that software.

1.4.8 Programmable Fast Interrupt Controller (PFIC)

The chip has a built-in Programmable Fast Interrupt Controller (PFIC) that supports up to 256 interrupt vectors, providing flexible interrupt management with minimal interrupt latency. The 2 cores in the chip manage 32 private interrupts of each core and share other interrupts. 116 peripheral interrupt sources can be allocated through the configuration register of PFIC. The shared interrupt source can only generate interrupt requests to the assigned core.

- Support hardware interrupt stack (HPE) without instruction overhead
- Provide 4 table-free interrupts (VTF)
- Vector table support address or instruction mode
- Core RISC-V3F supports up to configurable level 2 interrupt nesting
- Core RISC-V5F supports up to configurable level 8 interrupt nesting
- Support low-power sleep and wake-up management

1.4.9 External Interrupt/Event Controller (EXTI)

The external interrupt/event controller contains a total of 27 edge detectors for generating interrupt/event requests. Each interrupt line can be configured independently of its trigger event (rising or falling edge or double edge) and can be individually masked; a pending register maintains the status of all interrupt requests. EXTI can detect that the pulse width is smaller than the clock cycle of the internal HB. Up to 95 general purpose I/O ports are optionally connected to 16 external interrupt lines.

1.4.10 General DMA Controller

The chip has 2 sets of general-purpose DMA controllers built-in, which manages a total of 16 channels, of which DMA1 contains 8 channels and DMA2 contains 8 channels. It can flexibly handle high-speed data transfers between memory to memory, peripheral to memory and memory to peripheral, supporting the ring buffer approach. Supports access requests to memory by one or more peripherals; by configuring related registers, each

channel of the DMA can choose to support requests to related peripherals; can configure access priority, transmission length, transmission source and destination address, etc.

DMA is used for the main peripherals including: General-purpose/advanced-control timers TIMx, ADC, DAC, I2S, USART, I2C, SPI, SDIO, SAI, DFSDM, SWPMI, I3C, QSPI.

Note: DMA1, DMA2 and CPU access to system SRAM after arbiter arbitration.

1.4.11 Clock and Boot

The system clock source HSI is turned on by default. After no clock is configured or reset, the internal 25MHz RC oscillator is used as the default CPU clock. Then, an external 25MHz clock or PLL clock can be selected. When the clock safety mode is turned on, if the HSE is used as the system clock (direct or indirect), when an external clock failure is detected, the system clock will automatically switch to the internal RC oscillator, and the HSE and PLL will be automatically turned off; for the low-power mode of the clock that turns off, the system will automatically switch to the internal RC oscillator after wake-up. If a clock interrupt is enabled, the software can receive the corresponding interrupt.

1.4.12 RTC

The RTC and the backup register are in the backup power supply area within the system, which is powered by the V_{DD33} when the V_{DD33} is valid, and automatically switched to the power supply by the V_{BAT} pin when the V_{DD33} is invalid.

The RTC real-time clock is a set of 32-bit programmable counters with a time base that supports 20-bit prescaling and is used for long-time measurement. The clock reference comes from a high-speed external clock division (HSE/512), an external crystal low frequency oscillator (LSE), or an internal low-power RC oscillator (LSI). Among them, there is also a backup power supply area in LSE, so when LSE is selected as RTC, the setting and time of RTC can remain unchanged after the system resets or wakes up from Stop mode.

1.4.13 Analog-to-digital Converter (ADC) and Touch-key Capacitance Detection

The chip has two 12-bit analog/digital converters (ADCs), which use up to 16 external channels and 2 internal channels to sample, and the sampling rate can reach 5Msps. The chip provides programmable channel sampling time, can achieve single, continuous, scan or interrupt conversion, and supports dual ADC conversion mode. Provides analog watchdog function allows very precise monitoring of one or more selected channels for monitoring channel signal voltages, provides configurable analog watchdog reset function to reset the system when monitored voltage exceeds a threshold. Supports external event-triggered transitions. Trigger sources include internal signals from on-chip timers and external pins. Supports operation using DMA.

The internal channels of ADC are ADC_IN16~ADC_IN17 respectively. The temperature sensor is connected to the IN16 input channel; The internal reference voltage V_{REFINT} is connected to the IN17 input channel.

The touch-key capacitance detection unit provides up to 16 detection channels and reuses the external channels of the ADC module. The detection result is converted into the output result by the ADC module, and the touch-key state is identified by the user software.

1.4.14 HSADC (High-speed Analog/Digital Converter)

The chip has a built-in 10-bit high-speed analog/digital converter (HSADC), providing samples from up to 7 external channels, with sampling rates up to 20Msps, which can achieve continuous conversion and support DMA operation.

1.4.15 DAC (Digital/Analog Converter)

The chip has built-in two 12-bit voltage output digital/analog converters (DACs), which convert 2 digital signals into 2 analog voltage signals and output them. It supports independent or synchronous conversion of dual DAC channels, supports left or right alignment of 12-bit data, supports 12-bit or 8-bit data, and supports external event trigger conversion. It can realize triangular wave and noise generation. Supports DMA function.

1.4.16 Timer and Watchdog

Timers in the system include advanced-control timers, general-purpose timers, basic timers, watchdog timers and system time base timers, please refer to Table 1-1 for details.

Table 1-1 Timer comparison

Timer		Resolution	Count type	Time base	DMA	Function
ADTM	TIM1	16-bit	Up Down Up/down	16-bit frequency divider	Support	PWM complementary output, single pulse output Input capture Output comparison Timing count
	TIM8					
GPTM	TIM2	16-bit	Up Down Up/down	16-bit frequency divider	Support	PWM generation, single pulse output Input capture Output comparison Timing count
	TIM3					
	TIM4					
	TIM5					
	TIM9	32-bit	Up Down Up/down	32-bit frequency divider	Support	PWM generation, single pulse output Input capture Output comparison Timing count
	TIM10					
	TIM11					
	TIM12					
Basic timer	TIM6	16-bit	Up	16-bit frequency divider	Support	Timing count
	TIM7					
Low-power timer	LPTIM1	16-bit	Up	3-bit frequency divider	Not support	Timing count
	LPTIM2					
Window Watchdog		7-bit	Down	4 frequency divider	Not support	Timing Reset system (Normal working)
Independent Watchdog		12-bit	Down	7 frequency divider	Not support	Timing Reset system (Normal + low power consumption operation)
System timebase timer 1		32-bit	Up/down	SYSCLK or SYSCLK/8	Not support	Timing
System timebase timer 2		32-bit	Up/down	SYSCLK or SYSCLK/8	Not support	Timing

- Advanced-control timer (TIM1/8)

The Advanced Timer Module consists of two 16-bit auto-loading increment/decrement counters (TIM1 and TIM8) with 16-bit programmable prescalers. In addition to the full general-purpose timer functionality, it can be viewed as a three-phase PWM generator assigned to 6 channels, with complementary PWM outputs with deadband insertion, allowing the timer to be updated for repeated counting cycles after a specified number of counter cycles, a braking function, and more. Many of the features of the Advanced Timer are the same as the General Purpose Timer, and the internal structure is the same, so the Advanced Timer can operate in concert with other TIM timers through the Timer Link function to provide synchronization or event linking capabilities.

- General-purpose timer (TIM2/3/4/5/9/10/11/12)

The general-purpose timer module includes 4×16-bit automatic re-installable timers (TIM2, TIM3, TIM4 and TIM5) and 4 32-bit automatic re-installable timers (TIM9, TIM10, TIM11 and TIM12), which are used to measure the pulse width or generate pulses, PWM waves of specific frequency, etc. Can be used in fields such as automation control and power supply.

TIM2/3/4/5/9/10/11/12 each has 4 independent channels, each supporting input capture, output comparison, PWM generation and single pulse mode output. It can also work with advanced timers through the timer link function to provide synchronization or event link function. In debug mode, the counter can be frozen while the PWM output is disabled, thereby cutting off the switches controlled by these outputs. Any general-purpose timer can be used to generate PWM output. Each timer has an independent DMA request mechanism.

- Basic timer (TIM6/7)

The basic timer module contains 2×16-bit automatic re-installable timers (TIM6 and TIM7) for counting and generating interrupts or DMA requests in update events. TIM6 and TIM7 support 16-bit programmable prescalers. A synchronization circuit that can provide clocks for digital-to-analog conversion (DAC) can be triggered. The basic timers are independent of each other and do not share any resources.

- Low-power timer (LPTIM1/LPTIM2)

LPTIM is a 16-bit upstream count timer, with a 3-bit programmable prescaler, supporting 8 frequency division coefficients (1, 2, 4, 8, 16, 32, 64, 128). Supports continuous/single trigger mode, can select software or hardware input trigger, supports PWM output, and supports I/O polarity configurable.

LPTIM has a variety of optional clock sources, the internal clock source is the LSE, LSI, HSI or PB1 clock, and the external clock source is the external clock on the LPTIM input, LPTIM can operate without the internal clock source, so LPTIM can be used as a 'pulse counter'. In addition, LPTIM can wake up the system from the low-power mode, so LPTIM is very suitable for realizing the 'time-out function' with very low power consumption.

- Independent watchdog (IWDG)

The independent watchdog is a free-running 12-bit decrement counter that supports 7 frequency division coefficients. The clock is provided by an internally independent RC oscillator (LSI) of about 40 kHz; because the LSI is independent of the main clock, it can be run in stop mode. IWDG can work completely independently outside the main program, so it is used to reset the entire system in the event of a problem, or to provide timeout management for the application as a free timer. The option byte can be configured to be a software or hardware startup watchdog. In debug mode, the counter can be frozen.

- Window watchdog (WWDG)

The window watchdog is a 7-bit decrement counter and can be set to run freely. Can be used to reset the entire

system when a problem occurs. It is driven by the main clock and has the function of early warning interrupt; in debug mode, the counter can be frozen.

- System time base timer (SysTick)

QingKe microprocessor core comes with two 32-bit optional increment or decrement counters, which is used to generate SYSTICK exceptions (exception number: 12), which can be specially used in real-time operating systems to provide 'heartbeat' rhythm for the system, or can be used as two standard 32-bit counter. It has automatic reload function and programmable clock source.

1.4.17 Universal Synchronous/Asynchronous Receiver Transmitter (USART)

The chip provides 8 sets of universal synchronous/asynchronous transceivers (USART1/2/3/4/5/6/7/8). It supports full-duplex asynchronous serial communication, synchronous unidirectional communication as well as half duplex single line communication, also LIN (Local Interconnect Network), compatible IrDA SIR ENDEC transmission codec specification, as well as modem (CTS/RTS hardware flow control) operation, and also supports multi-processor communication. It uses a fractional baud rate generator system and supports continuous communication by DMA operation.

1.4.18 Serial Peripheral Interface (SPI)

The chip provides 4 serial peripheral SPI interface (SPI1/2/3/4), support master or slave operation, dynamic switching. Support multi-master mode, full-duplex or half-duplex synchronous transmission, support basic SD card and MMC mode. Programmable clock polarity and phase, data bit width provides 8- or 16-bit selection, hardware CRC generation/check for reliable communication, and continuous communication support for DMA operation.

1.4.19 I2S (Audio) Interface

Up to 2 sets of standard I2S interfaces (multiplexed with SPI2 and SPI3) operate in master or slave mode. The software can be configured to transmit frames for 16/24/32-bit packets, supports audio sampling frequency from 8kHz to 562.2kHz, and supports 4 audio standards. In main mode, its main clock can be output to an external DAC or CODEC (decoder) at a fixed 256x audio sampling frequency, supporting DMA.

1.4.20 QSPI Interface

The chip has built-in 2 sets of dedicated QuadSPI, connect single, dual or quad (one data line) SPI FLASH memory media. The main features are:

- 3 functional modes: indirect mode, state polling mode and memory mapped mode
- Dual Flash mode, by accessing 2 FLASHs in parallel
- Integrated FIFO for transmit and receive
- SDR mode support
- Fully programmable frame format for indirect and memory-mapped modes
- Fully programmable opcodes for indirect and memory-mapped modes
- Generates DMA trigger signals when FIFO threshold is reached and transmission is complete
- Generates interrupts when FIFO threshold is reached, timeout occurs, operation is complete, and an access error occurs Generates interrupts on FIFO threshold, timeout, operation completion, and access error

1.4.21 I2C Bus

The chip provides 4 I2C bus interfaces, capable of working in multi-master or slave mode, performing all I2C bus specific timing, protocols, arbitration, etc. Both standard and fast communication speeds are supported and it is also compatible with SMBus 2.0.

The I2C interface provides 7-bit or 10-bit addressing, and supports dual slave addressing in 7-bit Slave mode. It integrates built-in hardware CRC generator/checker. It also supports DMA operation and supports SMBus bus version 2.0/PMBus bus.

1.4.22 I3C Bus

The I3C bus is a 2-wire serial single-ended multi-branch bus designed to improve the traditional I2C bus. The I3C interface is responsible for handling communication between the device and other devices connected to the I3C bus. It itself supports both as a master and a slave, and when used as a controller, it can enhance the functionality of the I2C interface while maintaining a certain degree of backward compatibility. The main features include:

- Support master/slave device
- Support MIPI I3C specification v1.1
- Support multi-host function
- Support DMA
- Support In-Band Interrupt (IBI) function
- Built-in error detection and recovery
- I3C SCL bus clocking up to 12.5MHz
- Support dynamically assigned addresses, direct and broadcast Common Command Code (CCC), and private read/write transfers

1.4.23 USB PD and Type-C Controller (USB PD)

Built-in USB Power Delivery controller and PD physical layer transceiver PHY support USB Type-C master-slave detection, automatic BMC codec and CRC, and CC pin supports hardware edge control.

Support USB PD2.0 and PD3.0 and PD3.2 power transmission, support SPR and EPR, support 100W or 240W fast charging, support PD power receiving terminal Sink and PD power supply terminal Source and DRP application. Support PDUSB, UFP, DFP and DRD applications.

Among them, the CC pins PB3/CC1R and PB4/CC2R of CH32H416RdU6 chip have built-in controllable RD pull-down resistors 5K1 defined by the Type-C specification.

1.4.24 Universal Serial Bus USB2.0 Full-speed Host/Device Controller (USBFS/OTG_FS)

USB2.0 full-speed host controller and device controller (USBFS), complies with USB2.0 full-speed standard. Provides 16 configurable USB device endpoints and a set of host endpoints. Supports control/batch/synchronous/interrupt transmission, dual buffer mechanism, USB bus suspend/recover operation, and provides standby/wake-up function.

The OTG_FS is a dual role USB controller that supports both host-side and device-side functionality and is compatible with the On-The-Go Supplement to the USB 2.0 specification. The controller can also be configured to support host-side only or device-side only functionality, compatible with the USB 2.0 Full Speed specification. Key features include:

- Supports the OTG protocol defined as an optional item in the (Physical Layer of the OTG_FS Controller) USB On-The-Go Supplement, Revision 1.3 specification
- Configurable through software for USB full-speed hosts, USB full-speed/low-speed devices, and USB dual-role devices
- Provide power-saving features
- Support control transfers, bulk transfers, interrupt transfers, real-time/synchronous transfers
- Provide bus reset, hang, wake-up, and resume
- Support packets up to 64 bytes, built-in FIFO, support interrupt and DMA

1.4.25 Universal Serial Bus USB2.0 High-speed Host/Device Controller (USBHS)

The USB2.0 high-speed controller has dual roles of host controller and device controller, and has a built-in USB-PHY physical layer transceiver with 480Mbps. When used as a host controller, it supports low-speed, full-speed and high-speed USB devices. When used as a device controller, it can be flexibly set to low-speed, full-speed or high-speed modes to suit a variety of applications. The main features include:

- Support USB 2.1, USB 2.0, USB 1.1, USB 1.0 protocol specifications
- Support USB Host function and USB Device function
- Support control transfer, lot transfer, interrupt transfer, real-time/synchronous transfer
- Provide bus reset, suspend, wake-up and resume functions
- Host support USB HUB
- Non-0 endpoints support up to 1024-byte packets, built-in FIFO, support for interrupts and DMA
- Support USART or I2C pin mapping. The host can be used for 2-wire debugging

1.4.26 Universal Serial Bus USB2.0 SuperSpeed Host/Device Controller (USBSS)

The USB3.0 SuperSpeed controller has the dual role of host controller and device controller. It has a built-in ultra-high-speed USBPHY physical layer transceiver, which can realize the USB3.0 interface product functions and supports 5Gbps USBSS ultra-high-speed signal.

This controller module provides a link layer register access interface for application code to manage device connection and disconnection, bus status, and power mode. It provides a host (HOST) function access interface and a device (DEVICE) function access interface, which is used to implement various data transmission and upper-layer protocols for the USB3.0 protocol specification. The main features include:

- Support USB 3.0 protocol specification and USB 3.2 Gen1
- Support USB Host function and USB Device function
- Power management mode supports U1/U2/U3 low-power state
- Support driving USB 3.0 HUB
- Support control transmission, lot transmission, interrupt transmission, real-time/synchronous transmission
- Non-0 endpoints support packets up to 1024 bytes and burst mode
- Support DMA to directly access the data in the buffer of each endpoint
- Self-developed controller and transceiver, high-speed integrated design, measured 450Mbytes per second

1.4.27 Serial-parallel Interchange Controller and Transceiver (SerDes)

The chip has built-in SerDes module that supports signal isolation and long-distance transmission, and supports 1.5Gbps high-speed differential signals (SERDES_RXP, SERDES_RXN, SERDES_TXP, SERDES_TXN pins). Long-distance data transmission can be carried out through a differential peer-to-peer transmission media in the

optical fiber module or network cable. The main features include:

- Programmable data transceiver rate, supports up to 1.5Gbps
- Supports network transformer high-voltage signal isolation, also supports capacitive low-voltage isolation
- Support Category 6 differential network cable 100 meters long-distance transmission of 500Mbps
- Built-in 8bit/10bit codec and CRC checksum, support serial number matching
- Built-in FIFO, support send/receive double-buffer mode
- Support DMA function, access address support byte alignment
- Provide a variety of transmission interrupt flags and status, and timely feedback information to the application layer
- Differential transceiver, can directly drive fiber optic modules

1.4.28 Controller Area Network (CAN)

The chip has 3 sets of CAN interfaces, compatible with specifications 2.0A and 2.0B (active), with a baud rate of up to 1Mbits/s, and supports time-triggered communication function. Standard frames with 11-bit identifiers can be received and sent, or extended frames with 29-bit identifiers can be received and sent. With 3 sending mailboxes and two 3-level deep receiving FIFO.

1.4.29 Digital Video Port (DVP)

DVP (Digital Video Port) is used to connect the camera module to obtain image data stream. It provides 8/10/12-bit parallel interface communication, and supports up to 150MHz pixel clock input frequency. It supports image data organized in the original row and frame format, such as YUV, RGB, etc., and also supports compressed image data such as JPEG format, which can receive high-speed parallel data streams output by external 8-bit, 10-bit, and 12-bit camera modules. During reception, it mainly relies on VSYNC and HSYNC signal synchronization. Supports image cropping function.

1.4.30 Random Number Generator (RNG)

The chip has a built-in hardware random number generator, based on continuous analog noise, which provides a 32-bit random number through internal analog circuitry.

1.4.31 Ethernet Controller and Transceiver (MAC+PHY)

The chip has a built-in Gigabit Ethernet controller (MAC) that complies with IEEE802.3-2002 standards, which acts as the data link layer. Its Link speed supports up to 1Gbps, supports gigabit and 100M and speed adaptation, and provides an RGMII interface to connect to external PHY chips. When applying, the development of network products is achieved by combining the TCP/IP protocol stack.

The CH32H417 chip also has a built-in 10/100Mbps Ethernet PHY physical layer transceiver. Single chip can realize Ethernet communication. The main features include:

- Conforms to IEEE 802.3 protocol specification and design
- Provide RGMII interface to connect external Ethernet PHY transceiver
- Support full-duplex operation and 10/100/1000Mbps data transmission rate
- Hardware Automatic IPv4 and IPv6 packet integrity check, IP/ICMP/UDP/TCP packet checksum calculation and auto-filling
- Multiple MAC address filtering modes
- Support LED
- SMI interface to configure and manage the external PHYs

- Support Ethernet controller MAC + built-in 10/100Mbps PHY
- Optional Ethernet controller MAC + external 1Gbps PHY
- Support Auto-MDIX switching of RX/TX and automatic identification of positive and negative signal lines

1.4.32 SIDO Host/Device Controller

The SDIO host interface provides the operation interface of multimedia card (MMC), SD memory card, SDIO card and CE-ATA device. Supports 3 different data bus modes: 1-bit (default), 4-bit and 8-bit. In 8-bit mode, this interface can enable data transmission rates to reach 100MHz. Currently, this interface is fully compatible with multimedia card system specification 4.5 (forward compatible), SDIO card specification 2.0, SD memory card specification 2.0, and CE-ATA digital protocol specification 1.1. The main features include:

- Support SD card, SDIO card and MMC card
- Support 1-bit, 4-bit and 8-bit bus modes
- Maximum communication clock up to 100MHz
- Compatible with MMC specification 4.5 (forward compatible)
- Compatible with SD card Specification 2.0, SDIO card specification 2.0
- Not compatible with SPI and QSPI

1.4.33 SD/EMMC Host/Device Controller (SDMMC)

The chip has a built-in SDMMC controller host/slave interface, the transmission clock can reach 200MHz, supports dual-edge sampling, supports 1/4/8-wire communication mode, and can be connected to external SD/TF cards, EMMC cards and other devices. The application code can flexibly set various commands, response packets, valid data packets, and double buffer length switching limits for data transmission and reception.

- Support SD physical layer 1.0 and 2.0 specifications, and UHS-I SDR50, DDR50 and SDR104 modes of SD3.0 specification
- Conform to the 4.4 and 4.5.1 specifications of EMMC card; supports HS200 and HS400 of EMMC card 5.0 specification
- Communication modes support 1-wire, 4-wire, and 8-wire modes
- Maximum communication clock up to 200MHz
- Support double-edge sampling
- Flexible and configurable packet lengths, command formats, and response states
- Provide hardware to stop the clock function automatically at the interval of data block
- Support SD card, SDIO card, EMMC card and other devices that conform to the SD interface protocol
- Support SDIO slave interface, which can complete the data exchange of the chip that supports the SDIO host interface.
- DMA double buffer function

1.4.34 Programmable Protocol I/O Controller (PIOC)

The programmable protocol I/O controller is based on a dedicated thin instruction set RISC core with a single clock cycle. It runs at the main frequency of the system. It has a program ROM with 2K instructions, 49 SFR registers and PWM timing/counter, and supports protocol control of 2 I/O pins.

- RISC core, optimized single-cycle bit-operated instruction set, full static instruction set
- Reuse 4K-byte system SRAM as 2K-word capacity program ROM, supports program pause and dynamic loading

- Provide 33-byte bi-directional and uni-directional registers each, provides 6-level independent Stack
- Support 2 general-purpose bi-directional I/O protocol control and input level change detection
- Support 1-wire and 2-wire interfaces with multiple protocol specifications by dynamically loading different protocol programs
- Support 1024 levels of serial connection of 1-wire ARGB chip

1.4.35 Serial Audio Interface (SAI)

The chip has a built-in set of serial audio interfaces (SAI), which supports I2S standard, LSB or MSB alignment, PCM/DSP, TDM and AC'97 and other audio protocols. It is suitable for mono and stereo applications and supports SPDIF output. In order to achieve the flexibility and configurability of the SAI interface, SAI includes 2 sets of control modules in A/B, each set of modules containing up to 4 I/O pins (SD, SCK, FS and MCLK).

The SAI can be configured in any combination of master/slave, transmit/receive, and depending on the audio submodule synchronous/asynchronous configuration, its mode of operation can be set to full duplex/simplex.

- Support a wide range of audio protocols such as I2S standard, LSB or MSB alignment, PCM/DSP, TDM and AC'97
- Provide 2 groups of independent control modules, each audio submodule can be configured as any combination of Master/Slave, Transmit/Receive, and both have an 8-word FIFO
- The 2 groups of control modules, A and B, can be in synchronous or asynchronous mode, and the master/slave configurations are independent of each other
- Up to 16 Slots, each Slot supports a size of 8-bit, 10-bit, 16-bit, 20-bit, 24-bit, or 32-bit data
- Support SPDIF output
- Frame Synchronization Configuration (active level, active length and offset)
- Support LSB or MSB data transfer
- Support Stereo/Mono audio functionality with mute mode
- Serial Clock Selection Edge Selection (SCK)
- Each audio submodule has 2 independent DMA interfaces supporting slave mode at frequencies up to 4MHz
- Error flag bits and interrupt sources:

- FIFO overflow and underflow
- Frame synchronization advance detection in slave mode
- Frame synchronization lag detection in slave mode
- AC'97 codec is not ready.
- Clock configuration error

1.4.36 Single-wire Protocol Master Interface (SWPMI)

Single-wire Protocol Master Interface (SWPMI) is a full-duplex single-wire communication technology. This technology implements single-wire protocol (SWP) communication based on the ETSITS102613 standard specification.

In SWPMI, data can be transmitted in 2 physical ways: The first is to realize data transmission from the master device to the slave device through the voltage domain (S1 signal); the second is to realize data transmission from the slave device to the master device through the current domain (S2 signal). The S1 signal is transmitted using a digital modulation method of pulse width modulation, while the S2 signal transmits data from the current change. Its main characteristics are as follows:

- Support full-duplex communication mode

- Support automatic handling of fill bits
- Support automatic SWP bus state management
- Provide send-back mode for testing
- Support automatic handling of start of frame (SOF) and automatic handling of end of frame (EOF)
- Support bit rate configurable up to 2 Mbit/s and interrupt configurable
- Provide CRC error, underflow, overflow, and recovery from device monitoring flags
- Support CRC-16 calculation, generation, and checking

1.4.37 Universal High-Speed Interface (UHSIF)

The chip has a built-in set of universal high-speed interfaces UHSIF, the transmission clock can reach up to 125MHz, supports 8-bit, 16-bit or 32-bit data width, and the theoretical maximum speed is 500Mbytes/s.

1.4.38 OPA

The chip has 3 sets of independently configured low offset voltage op amps (OPA1/2/3) built-in, and can also be used as voltage comparators. The inputs and outputs of each op amp can be selected for multiple channels by changing configurations. OPA1 also has an additional internal output channel directly connected to the input terminal of CMP CMP_P2. All 3 OPAs support programmable gain op amps (PGAs), support high-speed mode, and can increase the slew rate by setting high-speed mode.

1.4.39 CMP

A set of rail-to-rail universal voltage comparators that support optional hysteresis characteristics and digital filtering. The inputs of the voltage comparator CMP_P0~CMP_P1 and CMP_N0~CMP_N1 are respectively connected to the GPIO, while the other inputs CMP_P2 and CMP_N2 are connected to the output channels of OPA1 and DAC2 within the chip, respectively; the voltage comparison results can be selected by the configuration bit CMP_MODE or multiplexed into the internal sampling channel of the TIM (the control that releases I/O for other purposes).

1.4.40 LCD-TFT Display Controller (LTDC)

LCD-TFT (Liquid Crystal Display-Thin Film Transistor) Display Controller (LTDC) mainly provides parallel digital RGB and horizontal synchronization, vertical synchronization, pixel clock and data enabled signals, which can be used as output signals to different LCD and TFT panel interfaces. Its main characteristics are:

- Provide 24-bit RGB parallel pixel output: 8 bits per pixel (RGB888)
- Provide 2 display layers containing proprietary 8*256-bit FIFOs
- Support Color Look-Up Tables (CLUT) with up to 256 colors per layer
- Support Programmable timing of different display panels
- Support programmable background colors
- Support programmable polarity of HSYNC, VSYNC and data enable signals
- Up to 8 input color formats per display layer: ARGB8888, RGB888, RGB565, ARGB1555, ARGB4444, L8 (8-bit luminance or CLUT), AL44 (4-bit alpha + 4-bit luminance), AL88 (8-bit alpha + 8-bit luminance)
- Support flexible blending between 2 layers using alpha values (per pixel or constant)
- Support color keying (transparent colors)
- Support programmable window position and size
- Support thin-film transistor (TFT) color displays
- Support up to 3 programmable interrupt times

1.4.41 Graphics Processing Hardware Accelerator (GPHA)

GPHA is a DMA specially used for image processing. Provides indexed color mode and direct color mode, supporting all classic color coding schemes, supporting 4 bits per pixel to up to 32 bits. In addition, the GPHA module also comes with its own proprietary color lookup table (CULT). Its main characteristics are:

- Support single HB master device bus architecture
- HB slave programming interface supports 8/16/32-bit access (except 32-bit CLUT access)
- Support programmable source and target area sizes and offsets
- Support user-programmable source address and target address
- Support adjustable Alpha values (source, fixed, modulated)
- Support mixing of up to 2 sources
- Support programmable source and target color formats, up to 11 color formats and up to 32 bits per pixel
- Support 2 internal memories for storing CLUTs in indirect color mode
- Support programmable CLUT size, either by automatic loading of CLUTs by the CPU or by programmed CLUTs
- Support internal timer to control the bandwidth of the HB
- Support 3 modes of operation are supported: register-to-memory, memory-to-memory with pixel format conversion, memory-to-memory with pixel format conversion and blending.
- Support filling a specified part or all of the target image with a specific color.
- Support copying part or all of the source image to the corresponding part or all of the target image.
- Support pixel format conversion copying from part or all of a source image to part or all of a target image
- Support blending parts and/or all of 2 source images with different pixel formats, and then copying the result to a part or all of the target image with a different color format
- Support aborting, suspending GPHA running
- Support for generating an interrupt in case of a bus error or access conflict
- Support for generating an interrupt on process completion

1.4.42 Flexible Memory Controller (FMC)

The FMC module includes a configurable static memory controller (FSMC), synchronous dynamic randomized memory (SDRAM), and an HB interface, which supports devices such as SRAM, PSRAM, NOR, and NAND, and supports sequential access to 8/16/32-bit data. It can convert the transfer signals from the internal HB into a suitable external communication protocol, and flexibly configure the sampling delay time to meet different device timings.

In addition, the FSMC controller can also be used to interface with most graphics LCD controllers. It supports Intel 8080 and Motorola 6800 modes, making it easy to build simple graphics application environments or high-performance solutions for specialized acceleration controllers.

The main features of the FMC module are:

- Support connection to SRAM, PSRAM, NOR, and NAND devices
- Support burst mode for faster access to NOR, PSRAM, and SDRAM
- Support programmable continuous clock outputs for asynchronous and synchronous access
- Support sequential access to 8/16/32-bit data
- Support independent chip select control and independent configuration for each memory area
- Support write enable and byte channel select outputs
- Support external asynchronous wait control
- Support 16*32-bit deep write FIFOs
- SDRAM supports cacheable 6*32-bit deep read FIFO (6*14-bit address tag)

1.4.43 Digital Filter for ΣΔ Modulator (DFSDM)

The DFSDM is a high-performance module dedicated to connecting external ΣΔ modulators to MCUs. It includes 2 external digital serial interfaces and 2 digital filters with flexible ΣΔ digital processing options, providing up to 24-bit ADC final resolution. DFSDM also features selectable parallel data stream inputs from the internal ADC peripheral or device memory. Key features are:

- Provide 2 multiplexed input digital serial channels
- 2 internal digital parallel channels support optional inputs
- Support adjustable digital signal processing
- Support up to 24-bit output data resolution
- Support signed Data format
- Support automatic data offset correction (offset values are stored in registers by the user)
- Include 2 conversion modes: single conversion mode and continuous conversion mode
- Conversions can be turned on synchronously by software trigger, internal timer, external event, or by using the first DFSDM filter
- Support analog watchdog
- Built-in short-circuit detector to detect saturated analog input values (lower and upper limits)
- Support generating breaks when analog watchdog events and short-circuit monitoring events occur
- Built-in extreme value detector
- Support Interrupt and DMA

1.4.44 Encryption Module (ECDC)

The chip has built-in packet cipher algorithm module, which supports two packet cipher algorithms, AES and SM4, as well as electronic cipher book (ECB) and counter (CTR) modes. The module completes an encryption and decryption process with 128-bit data size as the basic unit, providing DMA encryption and decryption of data in memory and a single encryption and decryption mode of SFR registers. Its main characteristics are:

- ECB and CTR modes for 128-bit key of SM4 algorithm
- ECB and CTR modes for 128/192/256-bit key of AES algorithm
- Support direct encryption and decryption of a single 128-bit block of data in the way of writing SFR by software
- Support DMA (memory to memory) encryption and decryption of software-specified data blocks.

1.4.45 General-purpose Input/Output Interface (GPIO)

The chip has built-in 6 groups of GPIO ports (PA0~PA15, PB0~PB15, PC0~PC15, PD0~PD15, PE0~PE15, PF0~PF14), totaling 95 GPIO pins. Most of the pins can be configured by software as outputs (push-pull or open-drain), inputs (with or without pull-ups or pull-downs), or multiplexed peripheral function ports.

Pins PA9 to PA12, PC13 to PC15, and PE3 to PE6 are powered by V_{DD33}, rated at 3.3V. Among them, pins PC13 to PC15 are automatically switched to be powered by V_{BAT} when V_{DD33} is powered down.

Pins PA0 to PA8, PB2 to PB7, PB15, PC4 to PC5, PD8, PE2, PF6 to PF10 are powered by V_{DDIO}, rated 3.3V power supply, and support 1.8V, 2.5V, and 3.3V power supply.

High-speed pins PA13 to PA15, PB0 to PB1, PB10 to PB14, PC0 to PC3, PC6 to PC12, PD0 to PD7, PD9 to PD15, PE0 to PE1, PE7 to PE15, PF0 to PF5, and PF11 to PF14 are powered by V_{IO18}, with built-in voltage regulator for the I/O pins, and support 1.2V, 1.8V, 2.5V, 3.3V and supports dynamic power supply voltage

switching, and supports XO pin to configure the default voltage after power-on. Please refer to [12:9] fields of PWR_CTLR register in *CH32H417RM* for specific configuration information.

1.4.46 Serial Debug Interface (SDI)

The core comes with a 1-wire SDI Serial Debug Interface and a 2-wire SDI Serial Debug Interface. The system supports 2 debugging modes: 1-wire debugging is the default debugging mode, which corresponds to the SWIO pin (Single Wire Input Output), while 2-wire debugging corresponds to the SWDIO and SWCLK pins, which can be used to increase the speed of downloading. The default debugging interface pins are turned on after the system is powered on or reset, and the SDI can be turned off as needed after the main program is run.

Chapter 2 Pinouts and Pin Definition

2.1 Pinouts

2.1.1 CH32H417 Pinouts

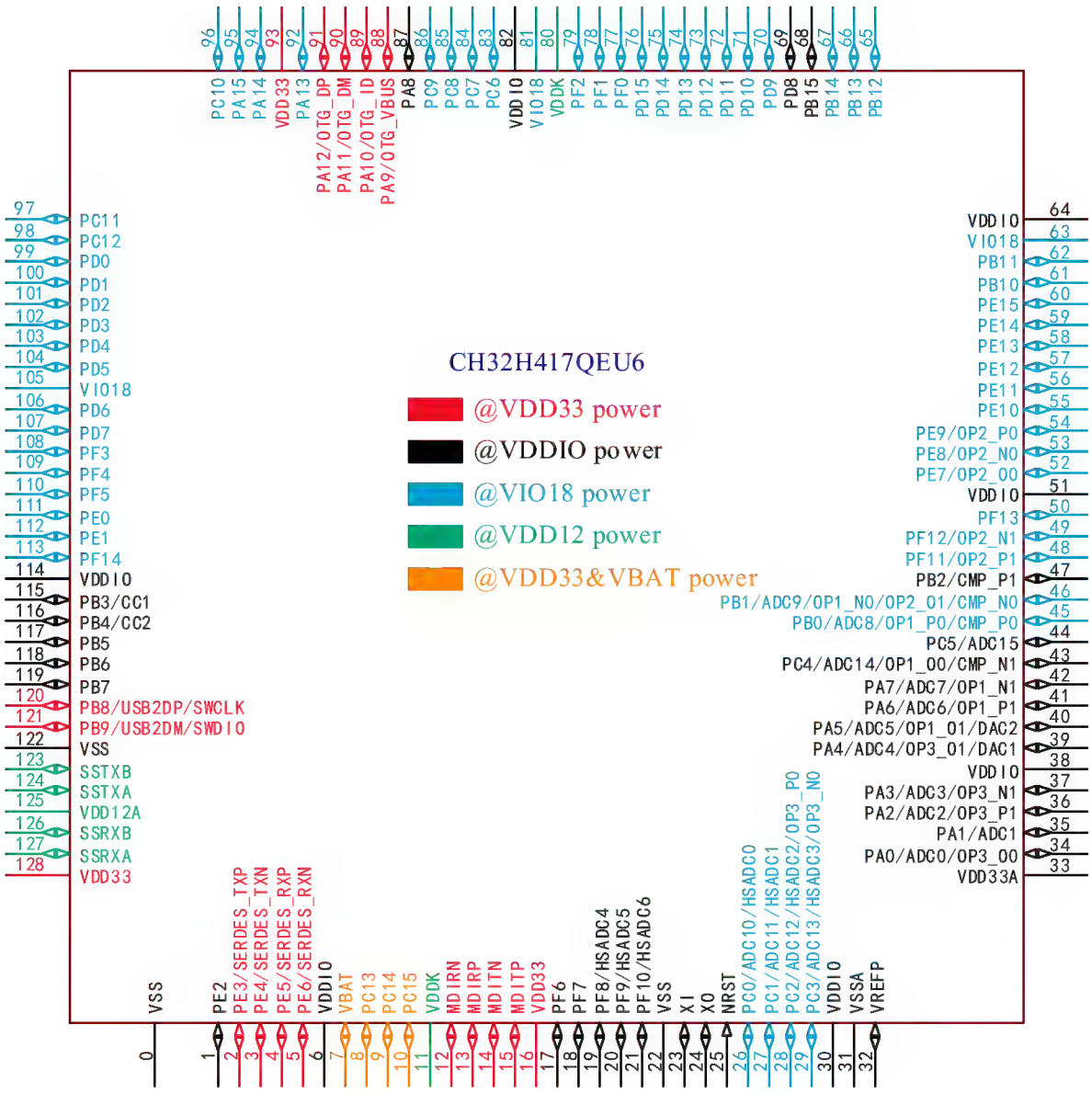

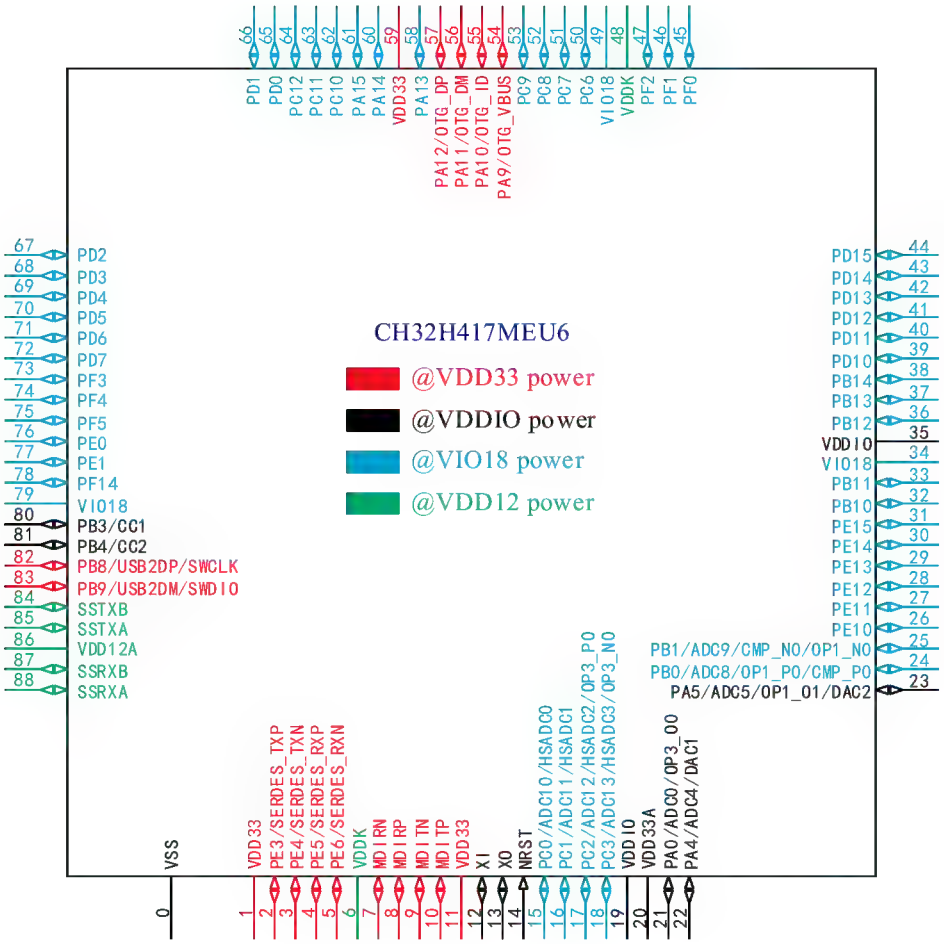
CH32H417MEU6
@VDD33 power
@VDDIO power
@VIO18 power
@VDD12 power
66 PD1
65 PD0
64 PC12
63 PC11
62 PC10
61 PA15
60 PA14
59 VDD33
58 PA13
57 PA12/OTG_DP
56 PA11/OTG_DM
55 PA10/OTG_ID
54 PA9/OTG_VBUS
53 PC9
52 PC8
51 PC7
50 PC6
49 VIO18
48 VDDK
47 PF2
46 PF1
45 PF0
67 PD2
68 PD3
69 PD4
70 PD5
71 PD6
72 PD7
73 PF3
74 PF4
75 PF5
76 PE0
77 PE1
78 PF14
79 VIO18
80 PB3/CC1
81 PB4/CC2
82 PB8/USB2DP/SWCLK
83 PB9/USB2DM/SWDIO
84 SSTXB
85 SSTXA
86 VDD12A
87 SSRXB
88 SSRXA
44 PD15
43 PD14
42 PD13
41 PD12
40 PD11
39 PD10
38 PB14
37 PB13
36 PB12
35 VDDIO
34 VIO18
33 PB11
32 PB10
31 PE15
30 PE14
29 PE13
28 PE12
27 PE11
26 PE10
25 PB1/ADC9/CMP_N0/OP1_N0
24 PB0/ADC8/OP1_P0/CMP_P0
23 PA5/ADC5/OP1_O1/DAC2
0 VSS
1 VDD33
2 PE3/SERDES_TXP
3 PE4/SERDES_TXN
4 PE5/SERDES_RXP
5 PE6/SERDES_RXN
6 VDDK
7 MDIRN
8 MDIRP
9 MDITN
10 MDITP
11 VDD33
12 XI
13 XO
14 NRST
15 PC0/ADC10/HSADC0
16 PC1/ADC11/HSADC1
17 PC2/ADC12/HSADC2/OP3_P0
18 PC3/ADC13/HSADC3/OP3_N0
19 VDDIO
20 VDD33A
21 PA0/ADC0/OP3_O0
22 PA4/ADC4/DAC1

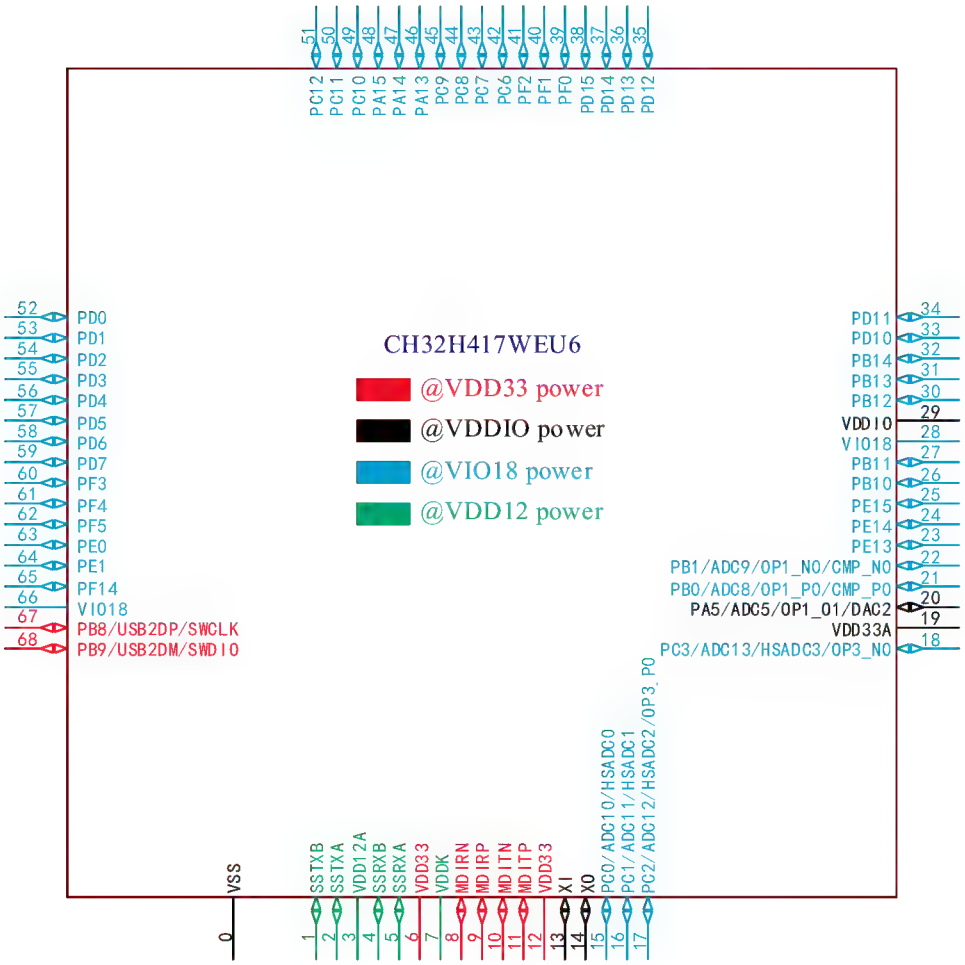
CH32H417WEU6
@VDD33 power
@VDDIO power
@VIO18 power
@VDD12 power
51 PC12
50 PC11
49 PC10
48 PA15
47 PA14
46 PA13
45 PC9
44 PC8
43 PC7
42 PC6
41 PF2
40 PF1
39 PF0
38 PD15
37 PD14
36 PD13
35 PD12
52 PD0
53 PD1
54 PD2
55 PD3
56 PD4
57 PD5
58 PD6
59 PD7
60 PF3
61 PF4
62 PF5
63 PE0
64 PE1
65 PF14
66 VIO18
67 PB8/USB2DP/SWCLK
68 PB9/USB2DM/SWDIO
34 PD11
33 PD10
32 PB14
31 PB13
30 PB12
29 VDDIO
28 VIO18
27 PB11
26 PB10
25 PE15
24 PE14
23 PE13
22 PB1/ADC9/OP1_NO/CMP_NO
21 PB0/ADC8/OP1_PO/CMP_PO
20 PA5/ADC5/OP1_O1/DAC2
19 VDD33A
18 PC3/ADC13/HSADC3/OP3_NO
0 VSS
1 SSTXB
2 SSTXA
3 VDD12A
4 SSRXB
5 SSRXA
6 VDD33
7 VDDK
8 MDIRN
9 MDIRP
10 MDITN
11 MDITP
12 VDD33
13 XI
14 XO
15 PC0/ADC10/HSADC0
16 PC1/ADC11/HSADC1
17 PC2/ADC12/HSADC2/OP3_PO

2.1.2 CH32H416 Pinouts

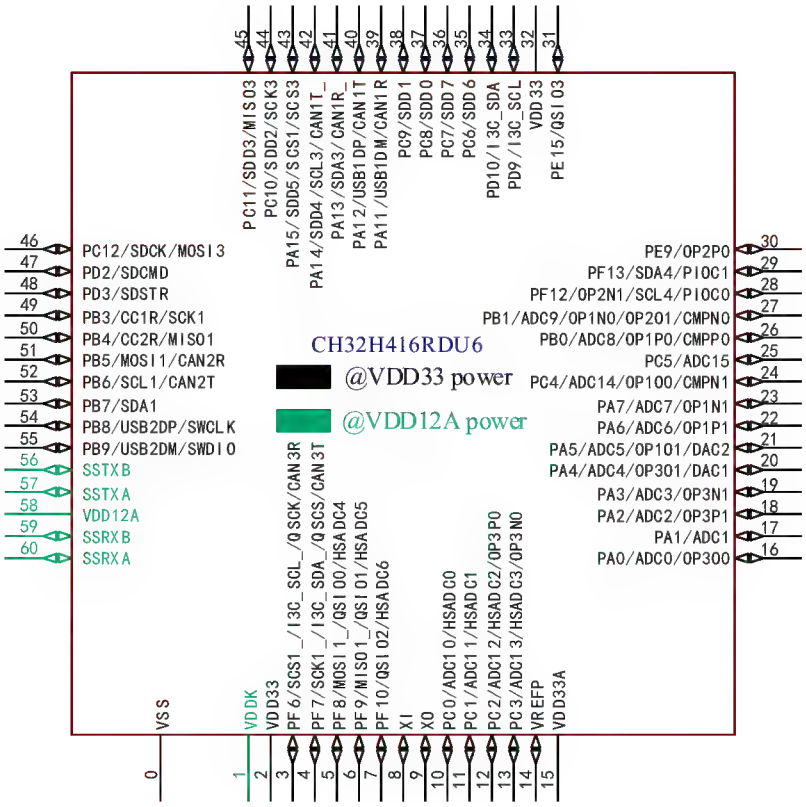

2.1.3 CH32H415 Pinouts

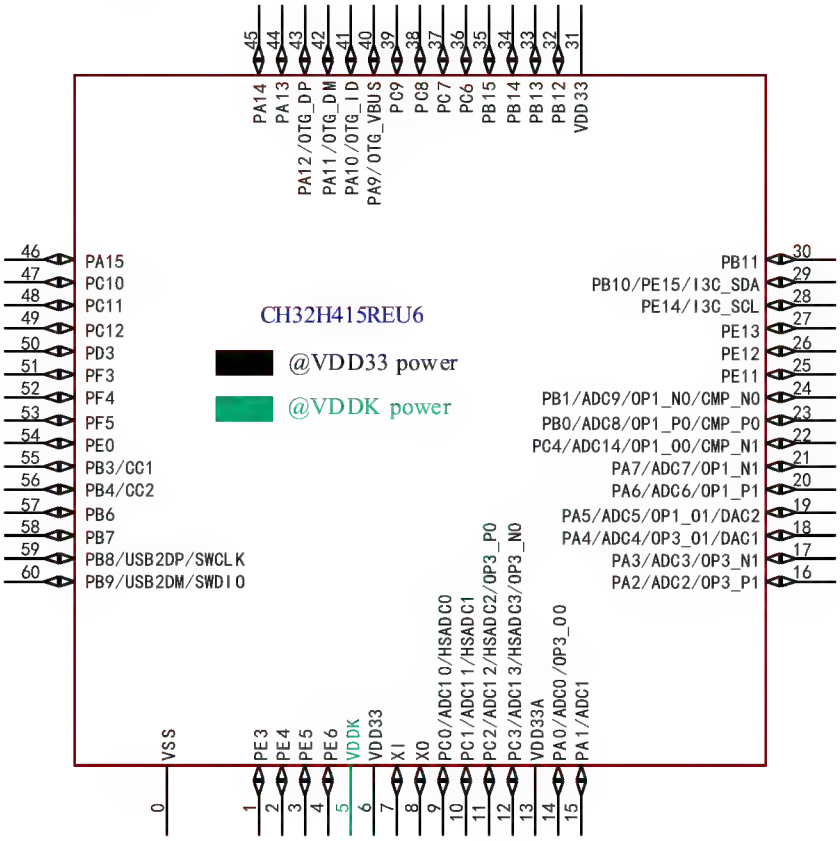

Note: The alternate functions in the pin diagram are abbreviated.

Example: ADC_: (ADC0:ADC_IN0)

HSADC_: (HSADC4:HSADC_IN4)

DAC_: (DAC1:DAC_OUT1)

USB2DP: USBHS_DP

USB2DN: USBHS_DN

SSRXA: USBSS_RXA

SSRXB: USBSS_RXB

SSTXA: USBSS_TXA

SSTXB: USBSS_TXB

OP: OPA_(OP1_P1:OPA1_P1, OP1_N1:OPA1_N1, OP1_O1:OPA1_OUT1)

2.2 Pin Description

Note that the pin function descriptions in the table below are for all functions and do not refer to specific chip models. Peripheral resources may vary from model to model, so please check the availability of this function against the chip model resource table before viewing.

Table 2-1-1 CH32H417 Pin definitions

Pin No.			Pin name	Pin type(1)	I/O characteristic(1)	Main function (After reset)	Pin function(2)	Remapping function(3)
H417WEU6	H417MEU6	H417QEU6						
0	0	0	V_{SS}	P	-	V_{SS}		
6	1	-	V_{DD33}	P	-	V_{DD33}		
-	-	1	PE2	I/O	FT	PE2	USART5_RX(AF4)/SPI4_SCK(AF5)/ SAI_MCLK_A(AF6)/USART6_CK(AF8)/ SDRAM_CLK(AF9)/FSMC_A23(AF12)/ DVP_D2(AF13)/LTDC_R6(AF14)	
-	2	2	PE3	I/O/ SDP	-	PE3	SERDES_TXP/TIM8_CH1(AF0)/ SDRAM_DQM2(AF1)/TIM4_CH1(AF2)/ TIM12_CH1(AF3)/PIOC_IO0(AF5)/ SAI_SD_B(AF6)/SDRAM_CS_N0(AF9)/ USART5_TX(AF11)/FSMC_A19(AF12)/ DVP_D3(AF13)	
-	3	3	PE4	I/O/ SDP	-	PE4	SERDES_TXN/TIM8_CH2(AF0)/ TIM4_CH2(AF2)/TIM12_CH2(AF3)/ PIOC_IO1(AF4)/SPI4_NSS(AF5)/ SAI_FS_A(AF6)/SDRAM_CS_N1(AF9)/ FSMC_A20(AF12)/DVP_D4(AF13)/ LTDC_B0(AF14)	
-	4	4	PE5	I/O/ SDP	-	PE5	SERDES_RXP/TIM8_CH3(AF0)/ TIM4_CH3(AF2)/TIM12_CH3(AF3)/ TIM9_CH3(AF4)/SPI4_MISO(AF5)/ SAI_SCK_A(AF6)/SDRAM_CKE0(AF9)/ SDRAM_D27(AF10)/FSMC_A21(AF12)/ DVP_D6(AF13)/LTDC_G0(AF14)	
-	5	5	PE6	I/O/ SDP	-	PE6	SERDES_RXN/TIM8_CH4(AF0)/ TIM1_BKIN2(AF1)/TIM4_CH4(AF2)/ TIM12_CH4(AF3)/TIM9_CH4(AF4)/ SPI4_MOSI(AF5)/SAI_SD_A(AF6)/ SDRAM_CKE1(AF7)/USART8_CK(AF8)/ SDRAM_D28(AF10)/CMP_OUT(AF11)/ FSMC_A22(AF12)/DVP_D7(AF13)/ LTDC_G1(AF14)	

Pin No.			Pin name	Pin type(1)	I/O characteristic(1)	Main function (After reset)	Pin function(2)	Remapping function(3)
H417WEU6	H417MEU6	H417QEU6						
-	-	6	V_{DDIO}	P	-	V_{DDIO}		
-	-	7	V_{BAT}	P	-	V_{BAT}		
-	-	8	PC13(4)-RTC	I/O	-	PC13(5)	RTC(AF1)/FSMC_A5(AF12)/ SDRAM_A5(AF12)	
-	-	9	PC14(4)-OSC32_IN	I/O/A	-	PC14(5)	OSC32_IN/SDRAM_CKE1(AF9)/ FSMC_D16(AF12)/SDRAM_D16(AF12)	
-	-	10	PC15(4)-OSC32_OUT	I/O/A	-	PC15(5)	OSC32_OUT/SDRAM_RAS_N(AF9)/ FSMC_D17(AF12)/SDRAM_D17(AF12)	
7	6	11	V_{DDK}	P	-	V_{DDK}	Main V_{DDK}	
8	7	12	MDIRN(6)	ETH	-	MDIRN		
9	8	13	MDIRP(6)	ETH	-	MDIRP		
10	9	14	MDITN(6)	ETH	-	MDITN		
11	10	15	MDITP(6)	ETH	-	MDITP		
12	11	16	V_{DD33}	P	-	V_{DD33}	Main V_{DD33}	
-	-	17	PF6	I/O	FT	PF6	CAN3_RX(AF2)/SPI1_NSS(AF3)/ QSPI2_SCK(AF4)/I3C_SCL(AF5)/ SAI_SD_B(AF6)/USART8_RX(AF7)/ TIM10_CH3(AF9)/QSPI1_SIO3(AF10)/ FSMC_D18(AF12)/SDRAM_D18(AF12)/ TIM11_CH1(AF13)	
-	-	18	PF7	I/O	FT	PF7	CAN3_TX(AF2)/SPI1_SCK(AF3)/ QSPI2_SCSN(AF4)/I3C_SDA(AF5)/ SAI_MCLK_B(AF6)/USART8_TX(AF7)/ TIM10_CH4(AF9)/QSPI1_SIO2(AF10)/ FSMC_D19(AF12)/SDRAM_D19(AF12)/ TIM11_CH2(AF13)	
-	-	19	PF8	I/O	-	PF8	HSADC_IN4/SPI1_MOSI(AF3)/ QSPI2_SIO0(AF4)/SAI_SCK_B(AF6)/ USART8_RTS(AF7)/QSPI2_SIO0(AF8)/ TIM10_CH1(AF9)/TIM11_CH3(AF13) QSPI1_SIO0(AF10)/FSMC_D20(AF12)/SD RAM_D20(AF12)/	
-	-	20	PF9	I/O/A	-	PF9	HSADC_IN5/SPI1_MISO(AF3)/ QSPI2_SIO1(AF4)/SAI_FS_B(AF6)/ USART8_CTS(AF7)/TIM10_CH2(AF9)/ USART8_RTS(AF11)/ QSPI1_SIO1(AF10)/FSMC_D21(AF12)/SD	

Pin No.			Pin name	Pin type(1)	I/O characteristic(1)	Main function (After reset)	Pin function(2)	Remapping function(3)
H417WEU6	H417MEU6	H417QEU6						
							RAM_D21(AF12)/TIM11_CH4(AF13)	
-	-	21	PF10	I/O/A	-	PF10	HSADC_IN6/QSPI2_SIO2(AF4)/ USART8_CK(AF7)/TIM10_ETR(AF8)/ USART8_CTS(AF11)/FSMC_D22(AF12)/S DRAM_D22(AF12)/DVP_D11(AF13)/ LTDC_DE(AF14)	
-	-	22	V_{SS}	P	-	V_{SS}		
13	12	23	XI	I/A	-	XI		
14	13	24	XO	O/A	-	XO		
-	14	25	NRST	I	-	NRST		
15	15	26	PC0	I/O/A	-	PC0	ADC_IN10/HSADC_IN0/ TIM8_BKIN(AF0)/ETH_MDC(AF1)/ DFSDM_CKIN0(AF3)/FSMC_D4(AF4)/ PIOC_IO1(AF5)/SAI_MCLK_A(AF7)/ I2C2_SCL(AF9)/QSPI2_SIO3(AF10)/ LTDC_G2(AF11)/SDRAM_WE_N(AF12)/ LTDC_R5(AF14)/SDRAM_CAS_N(AF15)	UHSIF_CLK_1
16	16	27	PC1	I/O/A	-	PC1	ADC_IN11/HSADC_IN1/ TIM8_CH1N(AF0)/ETH_MDIO(AF1)/ TIM5_CH1(AF2)/DFSDM_DATIN0(AF3)/ FSMC_D5(AF4)/SPI2_MOSI(AF5)/ I2S1_SDO(AF5)/SAI_SD_A(AF7)/ PIOC_IO0(AF7)/I2C2_SDA(AF9)/ QSPI2_SCSXN(AF10)/SDIO_CK(AF11)/L TDC_G5(AF14)/SDRAM_WE_N(AF15)	UHSIF_PORT0_2/ UHSIF_PORT0_3/ UHSIF_PORT3_1
17	17	28	PC2	I/O/A	-	PC2	ADC_IN12/HSADC_IN2/OPA3_P0/ TIM8_CH2N(AF0)/ETH_PPS(AF1)/ TIM5_CH2(AF2)/DFSDM_CKIN1(AF3)/ FSMC_D6(AF4)/SPI2_MISO(AF5)/ I2S1_SDI(AF5)/DFSDM_CKOUT(AF6)/ SAI_SCK_A(AF7)/PIOC_IO1(AF8)/ I2C2_SMBA(AF9)/ QSPI2_SIOX0(AF10)/ SDRAM_CS_NO(AF12)/ SDRAM_DQM0(AF15)	UHSIF_PORT1_2/ UHSIF_PORT1_3/ UHSIF_PORT4_1
18	18	29	PC3	I/O/A	-	PC3	ADC_IN13/HSADC_IN3/ OPA3_N0/TIM8_CH3N(AF0)/ TIM5_CH3(AF2)/DFSDM_DATIN1(AF3)/ FSMC_D7(AF4)/SPI2_MOSI(AF5)/	UHSIF_PORT2_2/ UHSIF_PORT2_3/ UHSIF_PORT5_1

Pin No.			Pin name	Pin type(1)	I/O characteristic(1)	Main function (After reset)	Pin function(2)	Remapping function(3)
H417WEU6	H417MEU6	H417QEU6						
							I2S1_SDO(AF5)/SAI_FS_A(AF7)/ QSPI2_SIOX1(AF10)/ SDRAM_D16(AF11)/FSMC_D16(AF11)/ SDRAM_CKE0(AF12)/ SDRAM_DQM1(AF15)	
-	19	30	V_{DDIO}	P	-	V_{DDIO}		
-	-	31	V_{SSA}	P	-	V_{SSA}		
-	-	32	V_{REFP}	P	-	V_{REFP}		
19	20	33	V_{DD33A}	P	-	V_{DD33A}		
-	21	34	PA0	I/O/A	-	PA0	ADC_IN0/OPA3_OUT0/ TIM2_CH1_ETR(AF1)/TIM5_CH1(AF2)/ TIM8_ETR(AF3)/QSPI2_SIOX2(AF4)/ IO2W_IO0(AF5)/TIM9_CH1(AF6)/ USART2_CTS(AF7)/USART6_TX(AF8)/ SDIO_CMD(AF9)/FSMC_D23(AF12)/ SDRAM_D23(AF12)/LTDC_R0(AF14)/ SDRAM_DQM2(AF15)	
-	-	35	PA1	I/O/A	-	PA1	ADC_IN1/TIM2_CH2(AF1)/ TIM5_CH2(AF2)/QSPI2_SIOX3(AF4)/ TIM9_CH2(AF6)/USART2_RTS(AF7)/ USART6_RX(AF8)/QSPI1_SIO3(AF9)/ FSMC_D24(AF12)/SDRAM_D24(AF12)/ LTDC_R2(AF14)	
-	-	36	PA2	I/O/A	-	PA2	ADC_IN2/OPA3_P1/TIM2_CH3(AF1)/ TIM5_CH3(AF2)/USART6_CK(AF3)/ TIM9_CH3(AF4)/USART2_TX(AF7)/ FSMC_D25(AF12)/SDRAM_D25(AF12)/ LTDC_R1(AF14)	
-	-	37	PA3	I/O/A	-	PA3	ADC_IN3/OPA3_N1/TIM2_CH4(AF1)/ TIM5_CH4(AF2)/TIM9_CH4(AF4)/ USART2_RX(AF7)/TIM10_CH3(AF8)/ LTDC_B2(AF9)/FSMC_D26(AF12)/ SDRAM_D26(AF12)/LTDC_B5(AF14)	
-	-	38	V_{DDIO}	P	-	V_{DDIO}		
-	22	39	PA4	I/O/A	-	PA4	ADC_IN4/DAC1_OUT/OPA3_OUT1/ TIM5_ETR(AF2)/TIM9_ETR(AF4)/ SPI1_NSS(AF5)/SPI3_NSS(AF6)/ I2S2_WS(AF6)/USART2_CK(AF7)/ TIM10_CH4(AF9)/FSMC_D27(AF12)	

Pin No.			Pin name	Pin type(1)	I/O characteristic(1)	Main function (After reset)	Pin function(2)	Remapping function(3)
H417WEU6	H417MEU6	H417QEU6						
							SDRAM_D27(AF12)/DVP_HSYNC(AF13) / LTDC_VSYNC(AF14)	
20	23	40	PA5	I/O/A	-	PA5	ADC_IN5/DAC2_OUT/OPA1_OUT1/ TIM2_CH1_ETR(AF1)/ TIM1_BKIN2(AF2)/TIM8_CH1N(AF3)/ SPI1_SCK(AF5)/TIM10_ETR(AF9)/ DVP_VSYNC(AF11)/FSMC_D28(AF12)/ SDRAM_D28(AF12)/LTDC_R4(AF14)	
-	-	41	PA6	I/O/A	-	PA6	ADC_IN6/OPA1_P1/TIM1_BKIN(AF1)/ TIM3_CH1(AF2)/TIM8_BKIN(AF3)/ SPI1_MISO(AF5)/SDRAM_DQM2(AF6)/ TIM10_CH1(AF9)/CMP_OUT(AF10)/ LTDC_HSYNC(AF11)/DVP_PCLK(AF13)/ LTDC_G2(AF14)	
-	-	42	PA7	I/O/A	-	PA7	ADC_IN7/OPA1_N1/TIM1_CH1N(AF1)/ TIM3_CH2(AF2)/TIM8_CH1N(AF3)/ SPI1_MOSI(AF5)/TIM10_CH2(AF9)/ SDRAM_WE_N(AF12)/ LTDC_VSYNC(AF14)/	
-	-	43	PC4	I/O/A	-	PC4	ADC_IN14/OPA1_OUT0/CMP_N1/ CAN3_RX(AF6)/I3C_SCL(AF7)/ SDRAM_CS_N0(AF12)/LTDC_R7(AF14)	
-	-	44	PC5	I/O/A	-	PC5	ADC_IN15/CAN3_TX(AF6)/ I3C_SDA(AF7)/SDRAM_CKE0(AF12)/ CMP_OUT(AF13)/LTDC_DE(AF14)	
21	24	45	PB0	I/O/A	-	PB0	ADC_IN8/OPA1_P0/CMP_P0/MCO(AF0)/ TIM1_CH2N(AF1)/TIM3_CH3(AF2)/ TIM8_CH2N(AF3)/TIM5_CH4(AF4)/ DFSDM_CKOUT(AF6)/SDRAM_DQM3(AF7)/USART6_CTS(AF8)/LTDC_R3(AF9) / FSMC_D29(AF12)/SDRAM_D29(AF12)/ TIM12_ETR(AF13)/LTDC_G1(AF14)	UHSIF_PORT3_2/ UHSIF_PORT3_3/ UHSIF_PORT6_1
22	25	46	PB1	I/O/A	-	PB1	ADC_IN9/OPA1_N0/OPA2_OUT1/ CMP_N0/TIM1_CH3N(AF1)/ TIM3_CH4(AF2)/TIM8_CH3N(AF3)/ TIM12_CH1(AF5)/SDRAM_BA0(AF7)/ DFSDM_DATIN1(AF6)/LTDC_R6(AF9)/	UHSIF_PORT4_2/ UHSIF_PORT4_3/ UHSIF_PORT7_1

Pin No.			Pin name	Pin type(1)	I/O characteristic(1)	Main function (After reset)	Pin function(2)	Remapping function(3)
H417WEU6	H417MEU6	H417QEU6						
							FSMC_D30(AF12)/SDRAM_D30(AF12)/ LTDC_G0(AF14)	
-	-	47	PB2	I/O/A	FT	PB2	CMP_P1/DFSDM_CKIN1(AF4)/ TIM12_CH2(AF5)/SAI_SD_A(AF6)/ SPI3_MOSI(AF7)/I2S2_SDO(AF7)/ QSPI1_SCK(AF9)/FSMC_D31(AF12) SDRAM_D31(AF12)/TIM11_ETR(AF13)	
-	-	48	PF11	I/O/A	-	PF11	OPA2_P1/UHSIF_CLK/ I2C4_SMBA(AF2)/SDRAM_RAS_N(AF12)	
-	-	49	PF12	I/O/A	-	PF12	OPA2_N1/UHSIF_PORT0/ I2C4_SCL(AF2)/PIOC_IO0(AF3)/ SDRAM_CAS_N(AF12)/ TIM12_CH3(AF13)	
-	-	50	PF13	I/O	-	PF13	UHSIF_PORT1/I2C4_SDA(AF2)/ PIOC_IO1(AF5)/DVP_PCLK(AF11)/ TIM12_CH4(AF13)	
-	-	51	V_{DDIO}	P	-	V_{DDIO}		
-	-	52	PE7	I/O/A	-	PE7	OPA2_OUT0/UHSIF_PORT2/ TIM1_ETR(AF1)/USART8_RX(AF7)/ QSPI1_SIOX0(AF10)/FSMC_D4(AF12)/S DRAM_D4(AF12)	
-	-	53	PE8	I/O/A	-	PE8	OPA2_N0/UHSIF_PORT3/ TIM1_CH1N(AF1)/USART8_TX(AF7)/ SDIO_D0(AF8)/QSPI1_SIOX1(AF10)/ FSMC_D5(AF12)/SDRAM_D5(AF12)	
-	-	54	PE9	I/O/A	-	PE9	OPA2_P0/UHSIF_PORT4/ TIM1_CH1(AF1)/DFSDM_CKOUT(AF3)/ SDIO_D1(AF8)/QSPI1_SIOX2(AF10)/ FSMC_D6(AF12)/SDRAM_D6(AF12)	
-	26	55	PE10	I/O	-	PE10	UHSIF_PORT5/TIM1_CH2N(AF1)/ SDRAM_D17(AF3)/SDIO_D2(AF8)/ QSPI2_SCK(AF7)/ QSPI1_SIOX3(AF10)/FSMC_D7(AF12)/S DRAM_D7(AF12)/SDRAM_BA1(AF15)	UHSIF_PORT5_2/ UHSIF_PORT5_3
-	27	56	PE11	I/O	-	PE11	UHSIF_PORT6/TIM1_CH2(AF1)/ SDRAM_D18(AF3)/SPI4_NSS(AF5)/ QSPI2_SCSN(AF7)/SDIO_D3(AF8)/ FSMC_D8(AF12)/SDRAM_D8(AF12)/	UHSIF_PORT6_2/ UHSIF_PORT6_3

Pin No.			Pin name	Pin type(1)	I/O characteristic(1)	Main function (After reset)	Pin function(2)	Remapping function(3)
H417WEU6	H417MEU6	H417QEU6						
							LTDC_G3(AF14)/SDRAM_A0(AF15)	
-	28	57	PE12	I/O	-	PE12	UHSIF_PORT7/TIM1_CH3N(AF1)/ SDRAM_D19(AF3)/SPI4_SCK(AF5)/ QSPI2_SIO0(AF7)/SDIO_D4(AF8)/ FSMC_D9(AF12)/SDRAM_D9(AF12)/ CMP_OUT(AF13)/LTDC_B4(AF14)/ SDRAM_A1(AF15)	UHSIF_PORT7_2/ UHSIF_PORT7_3
23	29	58	PE13	I/O	-	PE13	UHSIF_PORT8/TIM1_CH3(AF1)/ TIM12_CH2(AF2)/SPI4_MISO(AF5)/ QSPI2_SIO1(AF7)/SDIO_D5(AF8)/ FSMC_D10(AF12)/SDRAM_D10(AF12)/ LTDC_DE(AF14)/SDRAM_A2(AF15)	
24	30	59	PE14	I/O	-	PE14	UHSIF_PORT9/TIM1_CH4(AF1)/ TIM12_CH3(AF2)/I3C_SCL(AF3)/ SPI4_MOSI(AF5)/QSPI2_SIO2(AF7)/ SDIO_D6(AF8)/FSMC_D11(AF12)/ SDRAM_D11(AF12)/LTDC_CLK(AF13)/ SDRAM_A3(AF14)	
25	31	60	PE15	I/O	-	PE15	UHSIF_PORT10/TIM1_BKIN(AF1)/ TIM12_CH4(AF2)/I3C_SDA(AF3)/ QSPI2_SIO3(AF7)/SDIO_D7(AF8)/ USART5_CK(AF11)/FSMC_D12(AF12)/ SDRAM_D12(AF12)/CMP_OUT(AF13)/ LTDC_R7(AF14)/SDRAM_A4(AF15)	
26	32	61	PB10	I/O	-	PB10	UHSIF_PORT11/SDRAM_A5(AF0)/ TIM2_CH3(AF1)/TIM9_CH2(AF2)/ LPTIM2_CH1(AF3)/I2C2_SCL(AF4)/ SPI2_SCK(AF5)/I2S1_CK(AF5)/ FSMC_A19(AF6)/USART3_TX(AF7)/ SDIO_CMD(AF8)/USART6_CK(AF9)/ QSPI2_SCSXN(AF11)/ FSMC_A10(AF12)/SDRAM_A10(AF12)/ LTDC_G4(AF14)	SDMMC_D2_1(8)
27	33	62	PB11	I/O	-	PB11	UHSIF_PORT12/SDRAM_A6(AF0)/ TIM2_CH4(AF1)/FSMC_A20(AF2)/ LPTIM2_ETR(AF3)/I2C2_SDA(AF4)/ USART3_RX(AF7)/SDIO_CK(AF8)/ TIM9_CH4(AF9)/QSPI2_SIOX0(AF11)/ FSMC_A11(AF12)/SDRAM_A11(AF12)/	SDMMC_D3_1(8)

Pin No.			Pin name	Pin type(1)	I/O characteristic(1)	Main function (After reset)	Pin function(2)	Remapping function(3)
H417WEU6	H417MEU6	H417QEU6						
							LTDC_G5(AF14)	
28	34	63	V_{IO18}	P	-	V_{IO18}	Main V_{IO18}	
29	35	64	V_{DDIO}	P	-	V_{DDIO}	Main V_{DDIO}	
30	36	65	PB12	I/O	-	PB12	UHSIF_PORT13/SDRAM_A7(AF0)/ TIM1_BKIN(AF1)/TIM8_BKIN(AF2)/ FSMC_A21(AF3)/I2C2_SMBA(AF4)/ SPI2_NSS(AF5)/I2S1_WS(AF5)/ DFSDM_DATIN1(AF6)/ USART3_CK(AF7)/TIM9_CH3(AF8)/ CAN2_RX(AF9)/LTDC_VSYNC(AF10)/ QSPI2_SIOX1(AF11)/ FSMC_A12(AF12)/SDRAM_A12(AF12)/ CMP_OUT(AF13)/USART7_RX(AF14)/ DVP_PCLK(AF15)	
31	37	66	PB13	I/O	-	PB13	UHSIF_PORT14/SDRAM_A8(AF0)/ TIM1_CH1N(AF1)/TIM8_BKIN2(AF2)/ LPTIM2_OC(AF3)/TIM9_ETR(AF4)/ SPI2_SCK(AF5)/I2S1_CK(AF5)/ DFSDM_CKIN1(AF6)/ USART3_CTS(AF7)/DVP_HSYNC(AF8)/ CAN2_TX(AF9)/ETH_PHY_LED3(AF10)/ QSPI2_SIOX0(AF11)/ FSMC_A13(AF12)/DVP_D2(AF13)/ USART7_TX(AF14)/FSMC_A22(AF15)	SDMMC_D0_1(8)
32	38	67	PB14	I/O	-	PB14	UHSIF_PORT15/FSMC_A23(AF0)/ TIM1_CH2N(AF1)/TIM9_CH1(AF2)/ TIM8_CH2N(AF3)/USART1_TX(AF4)/ SPI2_MISO(AF5)/I2S1_SDI(AF5)/ LTDC_G0(AF6)/USART3_RTS(AF7)/ USART6_RTS(AF8)/SDIO_D0(AF9)/ ETH_PHY_LED4(AF10)/ QSPI2_SIOX1(AF11)/ FSMC_A14(AF12)/SDRAM_BA0(AF12)/ USART7_CK(AF13)/LTDC_CLK(AF14)/ DVP_VSYNC(AF15)	
-	-	68	PB15	I/O	FT	PB15	TIM1_CH3N(AF1)/TIM9_CH2(AF2)/ TIM8_CH3N(AF3)/USART1_RX(AF4)/ SPI2_MOSI(AF5)/I2S1_SDO(AF5)/ USART6_CTS(AF8)/SDIO_D1(AF9)/	

Pin No.			Pin name	Pin type(1)	I/O characteristic(1)	Main function (After reset)	Pin function(2)	Remapping function(3)
H417WEU6	H417MEU6	H417QEU6						
							FSMC_A15(AF12)/SDRAM_BA1(AF12)/ LTDC_G7(AF14)	
-	-	69	PD8	I/O	FT	PD8	USART3_TX(AF7)/FSMC_D13(AF12)/ SDRAM_D13(AF12)/LTDC_B7(AF14)	
-	-	70	PD9	I/O	-	PD9	SDRAM_A9(AF0)/I3C_SCL(AF5)/ USART3_RX(AF7)/FSMC_D14(AF12)/ SDRAM_D14(AF12)	UHSIF_CLK_3
33	39	71	PD10	I/O	-	PD10	UHSIF_PORT16/SDRAM_A10(AF0)/ DFSDM_CKOUT(AF3)/ LPTIM2_ETR(AF4)/I3C_SDA(AF5)/ USART3_CK(AF7)/RGMII_TXD3(AF10)/ FSMC_D15(AF12)/SDRAM_D15(AF12)/ LTDC_B3(AF14)	SDMMC_STR_1
34	40	72	PD11	I/O	-	PD11	UHSIF_PORT17/SDRAM_A11(AF0)/ LPTIM1_ETR(AF1)/LPTIM2_CH2(AF3)/I 2C4_SMBA(AF4)/TIM5_ETR(AF6)/ USART3_CTS(AF7)/QSPI1_SIO0(AF9)/ RGMII_TXD2(AF10)/LTDC_R4(AF11)/ FSMC_A16(AF12)/USART1_CK(AF14)	SDMMC_SDCK_1 SDMMC_SLVCK_ 1
35	41	73	PD12	I/O	-	PD12	UHSIF_PORT18/SDRAM_A12(AF0)/ LPTIM1_CH1(AF1)/TIM4_CH1(AF2)/ LPTIM2_CH1(AF3)/I2C4_SCL(AF4)/ CAN3_RX(AF5)/TIM5_CH1(AF6)/ USART3_RTS(AF7)/QSPI1_SIO1(AF9)/ RGMII_TXD1(AF10)/LTDC_R3(AF11)/ FSMC_A17(AF12)/DVP_D4(AF13)/ USART1_RX(AF14)	SDMMC_STS_1 SDMMC_CMD_1
36	42	74	PD13	I/O	-	PD13	UHSIF_PORT19/SDRAM_D0(AF0)/ LPTIM1_OC(AF1)/TIM4_CH2(AF2)/ LTDC_R2(AF3)/I2C4_SDA(AF4)/ CAN3_TX(AF5)/TIM5_CH2(AF6)/ QSPI1_SIO3(AF9)/ RGMII_TXD0(AF10)/FSMC_A18(AF12)/ DVP_D5(AF13)/USART1_TX(AF14)	
37	43	75	PD14	I/O	-	PD14	UHSIF_PORT20/SDRAM_D1(AF0)/ LPTIM1_CH2(AF1)/TIM4_CH3(AF2)/ TIM5_CH3(AF6)/LTDC_B1(AF8)/ QSPI1_SIO2(AF9)/ RGMII_TXEN(AF10)/	

Pin No.			Pin name	Pin type(1)	I/O characteristic(1)	Main function (After reset)	Pin function(2)	Remapping function(3)
H417WEU6	H417MEU6	H417QEU6						
							FSMC_D0(AF12)/SDRAM_D0(AF12)/ DVP_D6(AF13)/USART1_RTS(AF14)	
38	44	76	PD15	I/O	-	PD15	UHSIF_PORT21/SDRAM_D2(AF0)/ TIM4_CH4(AF2)/TIM5_CH4(AF6)/ LTDC_G2(AF7)/RGMII_GTXC(AF10)/ FSMC_D1(AF12)/SDRAM_D1(AF12)/ DVP_D7(AF13)/USART1_CTS(AF14)	
39	45	77	PF0	I/O	-	PF0	UHSIF_PORT22/SDRAM_D3(AF2)/ SDRAM_CS_N1(AF4)/ QSPI2_SCK(AF5)/USART4_CTS(AF7)/ ETH_PHY_LED0(AF10)/ LTDC_R1(AF11)/DVP_D11(AF12)/ LTDC_R7(AF14)	
40	46	78	PF1	I/O	-	PF1	UHSIF_PORT23/SDRAM_D4(AF2)/ QSPI2_SCSN(AF5)/ SAI_MCLK_A(AF6)/USART4_CK(AF7)/ LTDC_B0(AF8)/ETH_PHY_LED1(AF10)/ FSMC_INT2(AF12)/LTDC_CLK(AF14)	
41	47	79	PF2	I/O	-	PF2	UHSIF_PORT24/SDRAM_D5(AF2)/ TIM8_ETR(AF3)/ QSPI2_SIO0(AF5)/USART4_RTS(AF7)/ ETH_PHY_LED2(AF10)/ SDRAM_CLK(AF12)/LTDC_G7(AF14)	
-	48	80	V_{DDK}	P	-	V_{DDK}		
-	49	81	V_{IO18}	P	-	V_{IO18}		
-	-	82	V_{DDIO}	P	-	V_{DDIO}		
42	50	83	PC6	I/O	-	PC6	SDMMC_D6(8)/UHSIF_PORT25/ SDRAM_D6(AF0)/ TIM3_CH1(AF2)/TIM8_CH1(AF3)/ FSMC_D8(AF4)/SPI2_MCK(AF5)/ USART4_TX(AF7)/SDIO_D6(AF9)/ SWPMI_IO(AF11)/RGMII_RXD3(AF12)/ DVP_D0(AF13)/LTDC_HSYNC(AF14)	SDMMC_D6_1(8)
43	51	84	PC7	I/O	-	PC7	SDMMC_D7(8)/UHSIF_PORT26/ SDRAM_D7(AF0)/ TIM3_CH2(AF2)/TIM8_CH2(AF3)/ FSMC_D9(AF4)/SPI3_MCK(AF6)/ USART4_RX(AF7)/SDIO_D7(AF9)/ SWPMI_TX(AF11)/RGMII_RXD2(AF12)/	SDMMC_D7_1(8)

Pin No.			Pin name	Pin type(1)	I/O characteristic(1)	Main function (After reset)	Pin function(2)	Remapping function(3)
H417WEU6	H417MEU6	H417QEU6						
							DVP_D1(AF13)/LTDC_G6(AF14)	
44	52	85	PC8	I/O	-	PC8	SDMMC_D0/UHSIF_PORT27/ SDRAM_D8(AF0)/ TIM3_CH3(AF2)/TIM8_CH3(AF3)/ FSMC_D13(AF4)/TIM9_ETR(AF6)/ USART4_CK(AF7)/USART7_RTS(AF8)/ SWPMI_RX(AF11)/RGMII_RXD1(AF12)/ DVP_D2(AF13)/LTDC_G4(AF14)	
45	53	86	PC9	I/O	-	PC9	SDMMC_D1(8)/UHSIF_PORT28/ SDRAM_D9(AF0)/ TIM3_CH4(AF2)/TIM8_CH4(AF3)/ I2C3_SDA(AF4)/SPI3_MISO(AF5)/ I2S2_SDI(AF5)/TIM9_CH1(AF6)/ FSMC_D14(AF7)/USART7_CTS(AF8)/ QSPI1_SIO0(AF9)/LTDC_G3(AF10)/ SWPMI_SUP(AF11)/ RGMII_RXD0(AF12)/DVP_D3(AF13)/ LTDC_B2(AF14)/SAI_MCLK_B(AF15)	SDMMC_D1_1(8)
-	-	87	PA8	I/O	FT	PA8	TIM1_CH1(AF1)/TIM8_BKIN2(AF3)/ I2C3_SCL(AF4)/ SDRAM_DQM3(AF6)/ USART1_CK(AF7)/ USART8_RX(AF11)/CMP_OUT(AF12)/ LTDC_B3(AF13)/LTDC_R6(AF14)	
-	54	88	PA9	I/O/A	FT	PA9	OTG_VBUS/SDRAM_D10(AF0)/ TIM1_CH2(AF1)/ I2C3_SMBA(AF4)/SPI2_SCK(AF5)/ I2S1_CK(AF5)/USART1_TX(AF7)/ SDRAM_D20(AF8)/DVP_D0(AF13)/ LTDC_R5(AF14)	
-	55	89	PA10	I/O/A	FT	PA10	OTG_ID/SDRAM_D11(AF0)/ TIM1_CH3(AF1)/USART6_CK(AF6)/ USART1_RX(AF7)/SDRAM_D21(AF8)/ FSMC_A6(AF10)/SDRAM_A6(AF10)/ LTDC_B4(AF12)/DVP_D1(AF13)/ LTDC_B1(AF14)	
-	56	90	PA11	I/O/A	FT	PA11	OTG_DM/SDRAM_D12(AF0)/ TIM1_CH4(AF1)/USART3_CK(AF4)/ SPI2_NSS(AF5)/I2S1_WS(AF5)/	

Pin No.			Pin name	Pin type(1)	I/O characteristic(1)	Main function (After reset)	Pin function(2)	Remapping function(3)
H417WEU6	H417MEU6	H417QEU6						
							USART2_RX(AF6)/USART1_CTS(AF7)/ SDRAM_D22(AF8)/CAN1_RX(AF9)/ FSMC_A7(AF10)/SDRAM_A7(AF10)/ LTDC_R4(AF14)	
-	57	91	PA12	I/O/A	FT	PA12	OTG_DP/SDRAM_D13(AF0)/ TIM1_ETR(AF1)/USART3_RTS(AF4)/ SPI2_SCK(AF5)/I2S1_CK(AF5)/ USART6_TX(AF6)/USART1_RTS(AF7)/ SDRAM_D23(AF8)/CAN1_TX(AF9)/ FSMC_A8(AF10)/SDRAM_A8(AF10)/ TIM1_BKIN2(AF12)/LTDC_R5(AF14)/	
46	58	92	PA13	I/O	-	PA13	UHSIF_PORT29/SDRAM_D14(AF0)/ SPI3_MOSI(AF1)/I2S2_SDO(AF1)/ SDRAM_BA1(AF3)/USART3_TX(AF4)/ CAN_RX(AF5)/I2C3_SDA(AF7)/ LTDC_B2(AF8)/FSMC_A9(AF10)/ SDRAM_A9(AF10)/SAI_SD_B(AF13)/	
-	59	93	V_{DD33}	P	-	V_{DD33}		
47	60	94	PA14	I/O	-	PA14	SDMMC_D4(8)/UHSIF_PORT30/ SDRAM_D15(AF0)/SPI3_SCK(AF1)/ I2S2_CK(AF1)/SDRAM_A0(AF3)/ USART3_RX(AF4)/CAN_TX(AF5)/ I2C3_SCL(AF7)/USART8_CK(AF11)/ RGMII_RXDV(AF12)/ SAI_SCK_B(AF13)/LTDC_B6(AF14)/ LTDC_R0(AF15)	SDMMC_D4_1(8)
48	61	95	PA15	I/O	-	PA15	SDMMC_D5(8)/UHSIF_PORT31/ FSMC_NBL3(AF0)/ SDRAM_DQM3(AF0)/ TIM2_CH1_ETR(AF1)/ RGMII_RXC(AF3)/USART3_CTS(AF4)/ SPI1_NSS(AF5)/SPI3_NSS(AF6)/ I2S2_WS(AF6)/I2C3_SMBA(AF7)/ USART6_RTS(AF8)/LTDC_R3(AF9)/ LTDC_B4(AF10)/USART8_TX(AF11)/ SDRAM_A1(AF12)/SAI_FS_B(AF13)/ LTDC_B6(AF14)/LTDC_CLK(AF15)	SDMMC_D5_1(8)
49	62	96	PC10	I/O	-	PC10	SDMMC_D2(8)/UHSIF_PORT32/ FSMC_NBL2(AF0)/	SDMMC_STS_2/ SDMMC_STS_3/

Pin No.			Pin name	Pin type(1)	I/O characteristic(1)	Main function (After reset)	Pin function(2)	Remapping function(3)
H417WEU6	H417MEU6	H417QEU6						
							SDRAM_DQM2(AF0)/ TIM9_CH2(AF2)/SDRAM_D24(AF3)/ SPI3_SCK(AF6)/I2S2_CK(AF6)/ USART3_TX(AF7)/USART6_TX(AF8)/ QSPI1_SIO1(AF9)/LTDC_B1(AF10)/ SWPMI_RX(AF11)/DVP_D8(AF13)/ LTDC_R2(AF14)/LTDC_HSYNC(AF15)	SDMMC_CMD_2/ SDMMC_CMD_3/ UHSIF_PORT32_2/ UHSIF_PORT32_3
50	63	97	PC11	I/O	-	PC11	SDMMC_D3(8)/UHSIF_PORT33/ FSMC_NBL1(AF0)/ SDRAM_DQM1(AF0)/ TIM9_CH4(AF2)/SDRAM_D25(AF3)/ SPI3_MISO(AF6)/I2S2_SDI(AF6)/ USART3_RX(AF7)/USART6_RX(AF8)/ QSPI1_SCSXN(AF9)/DVP_D4(AF13)/ LTDC_B4(AF14)/LTDC_VSYNC(AF15)	SDMMC_STR_2/ SDMMC_STR_3/ UHSIF_PORT33_2/ UHSIF_PORT33_3
51	64	98	PC12	I/O	-	PC12	SDMMC_SDCK/SDMMC_SLVCK/ UHSIF_PORT34/FSMC_NBL0(AF0)/ SDRAM_DQM0(AF0)/TIM9_CH3(AF2)/ SDRAM_D26(AF3)/SPI3_MOSI(AF6)/ I2S2_SDO(AF6)/USART3_CK(AF7)/ USART7_TX(AF8)/DVP_D9(AF13)/ LTDC_R6(AF14)/LTDC_DE(AF15)	SDMMC_SDCK_2/ SDMMC_SDCK_3/ SDMMC_SLVCK_ 2/ SDMMC_SLVCK_ 3/ UHSIF_PORT34_2/ UHSIF_PORT34_3
52	65	99	PD0	I/O	-	PD0	UHSIF_PORT35/SDRAM_D10(AF1)/ USART6_RX(AF8)/CAN1_RX(AF9)/ FSMC_D2(AF12)/SDRAM_D2(AF12)/ LTDC_B1(AF14)/LTDC_R3(AF15)	SDMMC_D0_2/ SDMMC_D0_3/ UHSIF_PORT35_2/ UHSIF_PORT35_3
53	66	100	PD1	I/O	-	PD1	UHSIF_PORT36/SDRAM_D11(AF1)/ USART6_TX(AF8)/CAN1_TX(AF9)/ FSMC_D3(AF12)/SDRAM_D3(AF12)/ LTDC_R4(AF15)	SDMMC_D1_2(8)/ SDMMC_D1_3(8)/ UHSIF_PORT36_2/ UHSIF_PORT36_3
54	67	101	PD2	I/O	-	PD2	SDMMC_STS/SDMMC_CMD/ UHSIF_PORT37/SDRAM_D12(AF1)/ TIM3_ETR(AF2)/USART7_RX(AF8)/ LTDC_B7(AF9)/FSMC_A25(AF11)/ DVP_D11(AF13)/LTDC_B2(AF14)/ LTDC_R5(AF15)	SDMMC_D2_2(8)/ SDMMC_D2_3(8)/ UHSIF_PORT37_2/ UHSIF_PORT37_3
55	68	102	PD3	I/O	-	PD3	SDMMC_STR/UHSIF_PORT38/ SDRAM_D13(AF1)/TIM11_CH1(AF2)/	SDMMC_D3_2(8)/ SDMMC_D3_3(8)/

Pin No.			Pin name	Pin type(1)	I/O characteristic(1)	Main function (After reset)	Pin function(2)	Remapping function(3)
H417WEU6	H417MEU6	H417QEU6						
							DFSDM_CKOUT(AF3)/SPI2_SCK(AF5)/ I2S1_CK(AF5)/USART2_CTS(AF7)/ USART6_CK(AF8)/TIM3_CH1(AF9)/ FSMC_CLK(AF12)/DVP_D5(AF13)/ LTDC_G7(AF14)/LTDC_R6(AF15)	UHSIF_PORT38_2/ UHSIF_PORT38_3
56	69	103	PD4	I/O	-	PD4	UHSIF_PORT39/SDRAM_D14(AF1)/ TIM11_CH2(AF2)/ USART2_RTS(AF7)/USART7_CK(AF8)/ TIM3_CH2(AF9)/FSMC_NOE(AF12)/ LTDC_B4(AF14)/LTDC_R7(AF15)	SDMMC_D4_2(8)/ SDMMC_D4_3(8)/ UHSIF_PORT39_2/ UHSIF_PORT39_3
57	70	104	PD5	I/O	-	PD5	UHSIF_PORT40/SDRAM_D15(AF1)/ TIM11_CH3(AF2)/USART2_TX(AF7)/ TIM3_CH3(AF9)/FSMC_NWE(AF12)/ TIM11_ETR(AF13)/LTDC_B5(AF14)/ LTDC_G2(AF15)	SDMMC_D5_2(8)/ SDMMC_D5_3(8)/ UHSIF_PORT40_2/ UHSIF_PORT40_3
-	-	105	V_{IO18}	P	-	V_{IO18}		
58	71	106	PD6	I/O	-	PD6	UHSIF_PORT41/TIM11_CH4(AF2)/ SDRAM_CS_N0(AF3)/ DFSDM_DATIN1(AF4)/ SPI3_MOSI(AF5)/ I2S2_SDO(AF5)/SAI_SD_A(AF6)/ USART2_RX(AF7)/TIM3_CH4(AF9)/ USART5_CK(AF11)/ FSMC_NWAIT(AF12)/ DVP_D10(AF13)/LTDC_B2(AF14)/ LTDC_G3(AF15)	SDMMC_D6_2(8)/ SDMMC_D6_3(8)/ UHSIF_PORT41_2/ UHSIF_PORT41_3
59	72	107	PD7	I/O	-	PD7	UHSIF_PORT42/SDRAM_CS_N1(AF3)/ USART5_RTS(AF4)/SPI1_MOSI(AF5)/ DFSDM_CKIN1(AF6)/USART2_CK(AF7)/ FSMC_NE1(AF12)/TIM11_CH3(AF13)/ LTDC_B3(AF14)/LTDC_G4(AF15)	SDMMC_D7_2(8)/ SDMMC_D7_3(8)/ UHSIF_PORT42_2/ UHSIF_PORT42_3
60	73	108	PF3	I/O	-	PF3	UHSIF_PORT43/CAN3_TX(AF2)/ SDRAM_CKE0(AF4)/SPI1_MISO(AF5)/ USART4_RX(AF7)/QSPI1_SIOX2(AF9)/ DVP_D9(AF11)/FSMC_NE2(AF12)/ FSMC_NCE2(AF12)/DVP_VSYNC(AF13) /LTDC_B0(AF14)/LTDC_G5(AF15)	UHSIF_PORT43_2/ UHSIF_PORT43_3
61	74	109	PF4	I/O	-	PF4	UHSIF_PORT44/LPTIM1_ETR(AF1)/ CAN3_RX(AF2)/SDRAM_CKE1(AF4)/	UHSIF_PORT44_2/ UHSIF_PORT44_3

Pin No.			Pin name	Pin type(1)	I/O characteristic(1)	Main function (After reset)	Pin function(2)	Remapping function(3)
H417WEU6	H417MEU6	H417QEU6						
							SPI1_NSS(AF5)/USART4_TX(AF7)/ LTDC_G3(AF9)/DVP_D8(AF11)/ FSMC_NE3(AF12)/DVP_D2(AF13)/ LTDC_B2(AF14)/LTDC_G6(AF15)	
62	75	110	PF5	I/O	-	PF5	UHSIF_PORT45/LPTIM1_CH2(AF1)/ SDRAM_D29(AF3)/USART5_RX(AF4)/ SPI1_SCK(AF5)/QSPI1_SIOX3(AF9)/ FSMC_A0(AF12)/SDRAM_A0(AF12)/ DVP_D3(AF13)/LTDC_B3(AF14)/ LTDC_G7(AF15)	UHSIF_PORT45_2/ UHSIF_PORT45_3
63	76	111	PE0	I/O	-	PE0	UHSIF_PORT46/LPTIM1_CH1(AF1)/ SDRAM_A3(AF0)/SDRAM_D30(AF3)/ USART5_TX(AF4)/ USART4_RTS(AF7)/LTDC_B4(AF9)/ DVP_D0(AF11)/FSMC_NE4(AF12)/ TIM11_CH1(AF13)/LTDC_B1(AF14)/ LTDC_B3(AF15)	UHSIF_PORT46_2/ UHSIF_PORT46_3
64	77	112	PE1	I/O	-	PE1	UHSIF_PORT47/LPTIM1_OC(AF1)/ SDRAM_D31(AF3)/USART5_CTS(AF4)/ USART4_CTS(AF7)/DVP_D1(AF11)/ FSMC_A24(AF12)/TIM11_CH2(AF13)/ LTDC_R0(AF14)/LTDC_B4(AF15)	UHSIF_PORT47_2/ UHSIF_PORT47_3
65	78	113	PF14	I/O	-	PF14	SDRAM_CLK(AF1)/PIOC_IO1(AF5)/ DVP_D5(AF11)/FSMC_NADV(AF12)/ LTDC_B5(AF15)	UHSIF_CLK_2
66	79	-	V_{IO18}	P	-	V_{IO18}		
-	-	114	V_{DDIO}	P	-	V_{DDIO}		
-	80	115	PB3	I/O	-	PB3	TIM2_CH2(AF1)/CC1(AF4)/ SPI1_SCK(AF5)/SPI3_SCK(AF6)/ I2S2_CK(AF6)/SDIO_D2(AF9)/ USART8_RX(AF11)/FSMC_A1(AF12)/ SDRAM_A1(AF12)/DVP_D5(AF13)/ TIM12_ETR(AF14)	
-	81	116	PB4	I/O	-	PB4	TIM3_CH1(AF2)/CC2(AF4)/ SPI1_MISO(AF5)/ SPI3_MISO(AF6)/I2S2_SDI(AF6)/ SPI2_NSS(AF7)/I2S1_WS(AF7)/ SDIO_D3(AF9)/TIM4_ETR(AF10)/ USART8_TX(AF11)/FSMC_A2(AF12)/	

Pin No.			Pin name	Pin type(1)	I/O characteristic(1)	Main function (After reset)	Pin function(2)	Remapping function(3)
H417WEU6	H417MEU6	H417QEU6						
							SDRAM_A2(AF12)/USART7_CK(AF14)	
-	-	117	PB5	I/O	FT	PB5	TIM10_ETR(AF0)/TIM3_CH2(AF2)/ LTDC_B5(AF3)/I2C1_SMBA(AF4)/ SPI1_MOSI(AF5)/I2C4_SMBA(AF6)/ SPI3_MOSI(AF7)/I2S2_SDO(AF7)/ SPI2_MCK(AF8)/CAN2_RX(AF9)/ FSMC_D17(AF11)/SDRAM_D17(AF11)/ SDRAM_CKE1(AF12)/DVP_D10(AF13)/ USART7_RX(AF14)	
-	-	118	PB6	I/O	FT	PB6	TIM10_CH1(AF0)/FSMC_A5(AF1)/ TIM4_CH1(AF2)/CAN1_RX(AF3)/ I2C1_SCL(AF4)/SPI3_MCK(AF5)/ I2C4_SCL(AF6)/USART1_TX(AF7)/ CAN2_TX(AF9)/QSPI1_SCSN(AF10)/ SDRAM_A5(AF11)/ SDRAM_CS_N1(AF12)/DVP_D5(AF13)/ USART7_TX(AF14)	
-	-	119	PB7	I/O	FT	PB7	TIM10_CH2(AF0)/TIM4_CH2(AF2)/ CAN1_TX(AF3)/I2C1_SDA(AF4)/ I2C4_SDA(AF6)/USART1_RX(AF7)/ USART8_CK(AF10)/FSMC_NADV(AF12) / DVP_VSYNC(AF13)	
67	82	120	PB8	I/O/A	-	PB8	SWCLK/USBHS_DP/TIM10_CH3(AF1)/ TIM4_CH3(AF2)/SDRAM_RAS_N(AF3)/ I2C1_SCL(AF4)/PIOC_IO0(AF5)/ I2C4_SCL(AF6)/USART6_RX(AF8)/ CAN1_RX(AF9)/SDIO_D4(AF10)/ FSMC_A3(AF12)/SDRAM_A3(AF12)/ DVP_D6(AF13)/LTDC_B6(AF14)	
68	83	121	PB9	I/O/A	-	PB9	SWIO/SWDIO/USBHS_DM/ TIM10_CH4(AF1)/ TIM4_CH4(AF2)/SDRAM_DQM2(AF3)/ I2C1_SDA(AF4)/SPI2_NSS(AF5)/ I2S1_WS(AF5)/I2C4_SDA(AF6)/ PIOC_IO1(AF7)/USART6_TX(AF8)/ CAN1_TX(AF9)/SDIO_D5(AF10)/ I2C4_SMBA(AF11)/FSMC_A4(AF12)/ SDRAM_A4(AF12)/DVP_D7(AF13)/ LTDC_B7(AF14)	

Pin No.			Pin name	Pin type(1)	I/O characteristic(1)	Main function (After reset)	Pin function(2)	Remapping function(3)
H417WEU6	H417MEU6	H417QEU6						
-	-	122	V_{SS}	P	-	V_{SS}		
1	84	123	SSTXB(7)	USB3.0	-	SSTXB		
2	85	124	SSTXA(7)	USB3.0	-	SSTXA		
3	86	125	V_{DD12A}	P	-	V_{DD12A}		
4	87	126	SSRXB(7)	USB3.0	-	SSRXB		
5	88	127	SSRXA(7)	USB3.0	-	SSRXA		
-	-	128	V_{DD33}	P	-	V_{DD33}		

Note 1: Explanation of table abbreviations:

I = TTL/CMOS level Schmitt input; O = CMOS level tri-state output; A = analog signal input or output;

P = power supply; FT = tolerant 5V; USB3.0 = USB3.0 signal; ETH = Ethernet signal; SDP = SerDes PHY signal.

Note 2: The I/O pins are connected to the on-board peripherals/modules through a multiplexer that allows only one peripheral's multiplexing function (AF) to be connected to the I/O pins at a time. The multiplexer utilizes up to 16 multiplexing function inputs (AF0 to AF15), which can be configured through the GPIOx_AFLR and GPIOx_AFHR registers: after reset, the multiplexer selects for multiplexing function 0, i.e. (AF0). For more detailed information, please refer to the Multiplexing Function I/O section and the Debug Setup section of the CH32H417RM manual.

Note 3: The value after the remap function underline indicates the configuration value of the corresponding bit in the AFIO_PCFR1 register. For example, UHSIF_CLK_1 indicates that the corresponding bit of the register is configured as 01b.

Note 4: Both V_{DD33} and V_{BAT} can be connected to an internal analog switch to power the backup area as well as the PC13, PC14 and PC15 pins; this analog switch is only capable of passing a limited amount of current (3mA). When powered by V_{DD33}: PC14 and PC15 can be used for GPIO or LSE pins, PC13 can be used as a GPIO, an RTC calibration clock, an RTC alarm clock, or a seconds output; PC13, PC14, and PC15 can only operate in 2MHz mode when used as GPIO output pins, with a maximum drive load of 30pF and cannot be used as a current source (e.g., driving an LEDs). When powered by V_{BAT}: PC14 and PC15 can only be used for LSE pin, PC13 can be used as RTC alarm or second output.

Note 5: These pins are in the primary functional state when the backup area is first powered up, after that, even if reset, the state of these pins is controlled by the backup domain control registers (these registers are not reset by the primary reset system). For specific information on how to control these IO ports, refer to the Reset and Clock Control (RCC) section of the CH32H417RM manual.

Note 6: Supports Ethernet pin RX/TX send/receive identification and pairwise exchange, pin MDIRP/MDIRN positive/negative identification and exchange, and pin MDITP/MDITN positive/negative identification and exchange.

Note 7: USB3.0 pin signals support positive and negative identification and exchange, PCB alignment should refer to the USB specification for impedance matching to avoid over-hole. SSRXA/SSRXB default connection to

each other TXP/TXN, support cross-connect TXN/TXP, SSTXA/SSTXB default connection to each other RXP/RXN, support cross-connect RXN/RXP.

Note 8: When SDMMC is used in 1-wire or 4-wire mode, the GPIO pins corresponding to the unused data lines cannot be used as multiplexed outputs; they can be used as multiplexed inputs or as GPIO outputs.

Table 2-1-2 CH32H416 Pin definitions

Pin No. H416RDU6	Pin name	Pin type(1)	I/O characteristic(1)	Main function (After reset)	Default alternate function(2)	Remapping function(3)
0	V_{SS}	P	-	V_{SS}		
1	V_{DDK}	P	-	V_{DDK}		
2	V_{DD33}	P	-	V_{DD33}	Main V_{DD33}	
3	PF6	I/O	FT	PF6	CAN3_RX(AF2)/SPI1_NSS(AF3)/ QSPI2_SCK(AF4)/I3C_SCL(AF5)/ SAI_SD_B(AF6)/USART8_RX(AF7)/ TIM10_CH3(AF9)/QSPI1_SIO3(AF10)/ TIM11_CH1(AF13)	
4	PF7	I/O	FT	PF7	CAN3_TX(AF2)/SPI1_SCK(AF3)/ QSPI2_SCSN(AF4)/I3C_SDA(AF5)/ SAI_MCLK_B(AF6)/USART8_TX(AF7)/ TIM10_CH4(AF9)/QSPI1_SIO2(AF10)/ TIM11_CH2(AF13)	
5	PF8	I/O	-	PF8	HSADC_IN4/SPI1_MOSI(AF3)/ QSPI2_SIO0(AF4)/SAI_SCK_B(AF6)/ USART8_RTS(AF7)/QSPI2_SIO0(AF8)/ TIM10_CH1(AF9)/TIM11_CH3(AF13) QSPI1_SIO0(AF10)	
6	PF9	I/O/A	-	PF9	HSADC_IN5/SPI1_MISO(AF3)/ QSPI2_SIO1(AF4)/SAI_FS_B(AF6)/ USART8_CTS(AF7)/TIM10_CH2(AF9)/ USART8_RTS(AF11)/ QSPI1_SIO1(AF10)/TIM11_CH4(AF13)	
7	PF10	I/O/A	-	PF10	HSADC_IN6/QSPI2_SIO2(AF4)/ USART8_CK(AF7)/TIM10_ETR(AF8)/ USART8_CTS(AF11)/DVP_D11(AF13)/ LTDC_DE(AF14)	
8	XI	I/A	-	XI		
9	XO	O/A	-	XO		
10	PC0	I/O/A	-	PC0	ADC_IN10/HSADC_IN0/ TIM8_BKIN(AF0)/ DFSDM_CKIN0(AF3)/PIOC_IO1(AF5)/ SAI_MCLK_A(AF7)/I2C2_SCL(AF9)/ QSPI2_SIO3(AF10)/LTDC_G2(AF11)/ LTDC_R5(AF14)	
11	PC1	I/O/A	-	PC1	ADC_IN11/HSADC_IN1/	

Pin No. H416RDU6	Pin name	Pin type(1)	I/O characteristic(1)	Main function (After reset)	Default alternate function(2)	Remapping function(3)
					TIM8_CH1N(AF0)/TIM5_CH1(AF2)/ DFSDM_DATIN0(AF3)/ SPI2_MOSI(AF5)/I2S1_SDO(AF5)/ SAI_SD_A(AF7)/PIOC_IO0(AF7)/ I2C2_SDA(AF9)/QSPI2_SCSXN(AF10)/ SDIO_CK(AF11)/LTDC_G5(AF14)	
12	PC2	I/O/A	-	PC2	ADC_IN12/HSADC_IN2/OPA3_P0/ TIM8_CH2N(AF0)/TIM5_CH2(AF2)/ DFSDM_CKIN1(AF3)/SPI2_MISO(AF5) /I2S1_SDI(AF5)/DFSDM_CKOUT(AF6)/ SAI_SCK_A(AF7)/PIOC_IO1(AF8)/ I2C2_SMBA(AF9)/QSPI2_SIOX0(AF10)	
13	PC3	I/O/A	-	PC3	ADC_IN13/HSADC_IN3/ OPA3_N0/TIM8_CH3N(AF0)/ TIM5_CH3(AF2)/DFSDM_DATIN1 (AF3)/ SPI2_MOSI(AF5)/I2S1_SDO(AF5)/ SAI_FS_A(AF7)/QSPI2_SIOX1(AF10)/	
14	V_{REFP}	P	-	V_{REFP}		
15	V_{DD33A}	P	-	V_{DD33A}		
16	PA0	I/O/A	-	PA0	ADC_IN0/OPA3_OUT0/ TIM2_CH1_ETR(AF1)/TIM5_CH1(AF2) /TIM8_ETR(AF3)/QSPI2_SIOX2(AF4)/ IO2W_IO0(AF5)/TIM9_CH1(AF6)/ USART2_CTS(AF7)/USART6_TX(AF8)/ SDIO_CMD(AF9)/LTDC_R0(AF14)	
17	PA1	I/O/A	-	PA1	ADC_IN1/TIM2_CH2(AF1)/ TIM5_CH2(AF2)/QSPI2_SIOX3(AF4)/ TIM9_CH2(AF6)/USART2_RTS(AF7)/ USART6_RX(AF8)/QSPI1_SIO3(AF9)/ LTDC_R2(AF14)	
18	PA2	I/O/A	-	PA2	ADC_IN2/OPA3_P1/TIM2_CH3(AF1)/ TIM5_CH3(AF2)/USART6_CK(AF3)/ TIM9_CH3(AF4)/USART2_TX(AF7)/ LTDC_R1(AF14)	
19	PA3	I/O/A	-	PA3	ADC_IN3/OPA3_N1/TIM2_CH4(AF1)/ TIM5_CH4(AF2)/TIM9_CH4(AF4)/ USART2_RX(AF7)/TIM10_CH3(AF8)/	

Pin No. H416RDU6	Pin name	Pin type(1)	I/O characteristic(1)	Main function (After reset)	Default alternate function(2)	Remapping function(3)
					LTDC_B2(AF9)/LTDC_B5(AF14)	
20	PA4	I/O/A	-	PA4	ADC_IN4/DAC1_OUT/OPA3_OUT1/ TIM5_ETR(AF2)/TIM9_ETR(AF4)/ SPI1_NSS(AF5)/SPI3_NSS(AF6)/ I2S2_WS(AF6)/USART2_CK(AF7)/ TIM10_CH4(AF9)/DVP_HSYNC(AF13)/ LTDC_VSYNC(AF14)	
21	PA5	I/O/A	-	PA5	ADC_IN5/DAC2_OUT/OPA1_OUT1/ TIM2_CH1_ETR(AF1)/ TIM1_BKIN2(AF2)/TIM8_CH1N(AF3)/ SPI1_SCK(AF5)/TIM10_ETR(AF9)/ DVP_VSYNC(AF11)/LTDC_R4(AF14)	
22	PA6	I/O/A	-	PA6	ADC_IN6/OPA1_P1/TIM1_BKIN(AF1)/ TIM3_CH1(AF2)/TIM8_BKIN(AF3)/ SPI1_MISO(AF5)/TIM10_CH1(AF9)/ CMP_OUT(AF10)/LTDC_HSYNC(AF11) / DVP_PCLK(AF13)/LTDC_G2(AF14)	
23	PA7	I/O/A	-	PA7	ADC_IN7/OPA1_N1/TIM1_CH1N(AF1)/ TIM3_CH2(AF2)/TIM8_CH1N(AF3)/ SPI1_MOSI(AF5)/TIM10_CH2(AF9)/ LTDC_VSYNC(AF14)/	
24	PC4	I/O/A	-	PC4	ADC_IN14/OPA1_OUT0/CMP_N1/ CAN3_RX(AF6)/I3C_SCL(AF7)/ LTDC_R7(AF14)	
25	PC5	I/O/A	-	PC5	ADC_IN15/CAN3_TX(AF6)/ I3C_SDA(AF7)/CMP_OUT(AF13)/ LTDC_DE(AF14)	
26	PB0	I/O/A	-	PB0	ADC_IN8/OPA1_P0/CMP_P0 /MCO(AF0)/ TIM1_CH2N(AF1)/TIM3_CH3(AF2)/ TIM8_CH2N(AF3)/TIM5_CH4(AF4)/ DFSDM_CKOUT(AF6)/USART6_CTS(AF8)/LTDC_R3(AF9)/ TIM12_ETR(AF13)/ LTDC_G1(AF14)	
27	PB1	I/O/A	-	PB1	ADC_IN9/OPA1_N0/OPA2_OUT1/ CMP_N0/TIM1_CH3N(AF1)/	

Pin No. H416RDU6	Pin name	Pin type(1)	I/O characteristic(1)	Main function (After reset)	Default alternate function(2)	Remapping function(3)
					TIM3_CH4(AF2)/TIM8_CH3N(AF3)/ TIM12_CH1(AF5)/ DFSDM_DATIN1(AF6)/LTDC_R6(AF9)/ LTDC_G0(AF14)	
28	PF12	I/O/A	-	PF12	OPA2_N1/I2C4_SCL(AF2)/ PIOC_IO0(AF3)/TIM12_CH3(AF13)	
29	PF13	I/O	-	PF13	I2C4_SDA(AF2)/PIOC_IO1(AF5)/ DVP_PCLK(AF11)/TIM12_CH4(AF13)	
30	PE9	I/O/A	-	PE9	OPA2_P0/ TIM1_CH1(AF1)/ DFSDM_CKOUT(AF3)/ SDIO_D1(AF8)/QSPI1_SIOX2(AF10)/	
31	PE15	I/O	-	PE15	TIM1_BKIN(AF1)/ TIM12_CH4(AF2)/I3C_SDA(AF3)/ QSPI2_SIO3(AF7)/SDIO_D7(AF8)/ USART5_CK(AF11)/CMP_OUT(AF13)/ LTDC_R7(AF14)	
32	V_{DD33}	P	-	V_{DD33}		
33	PD9	I/O	-	PD9	I3C_SCL(AF5)/USART3_RX(AF7)/	
34	PD10	I/O	-	PD10	DFSDM_CKOUT(AF3)/ LPTIM2_ETR(AF4)/I3C_SDA(AF5)/ USART3_CK(AF7)/LTDC_B3(AF14)	SDMMC_STR_1
35	PC6	I/O	-	PC6	SDMMC_D6(5)/TIM3_CH1(AF2)/ TIM8_CH1(AF3)/SPI2_MCK(AF5)/ USART4_TX(AF7)/SDIO_D6(AF9)/ SWPMI_IO(AF11)/DVP_D0(AF13)/ LTDC_HSYNC(AF14)	SDMMC_D6_1(5)
36	PC7	I/O	-	PC7	SDMMC_D7(5)/TIM3_CH2(AF2)/ TIM8_CH2(AF3)/SPI3_MCK(AF6)/ USART4_RX(AF7)/SDIO_D7(AF9)/ SWPMI_TX(AF11)/DVP_D1(AF13)/ LTDC_G6(AF14)	SDMMC_D7_1(5)
37	PC8	I/O	-	PC8	SDMMC_D0/TIM3_CH3(AF2)/ TIM8_CH3(AF3)/TIM9_ETR(AF6)/ USART4_CK(AF7)/USART7_RTS(AF8)/ SWPMI_RX(AF11)/DVP_D2(AF13)/ LTDC_G4(AF14)	
38	PC9	I/O	-	PC9	SDMMC_D1(5)/TIM3_CH4(AF2)/	SDMMC_D1_1(5)

Pin No. H416RDU6	Pin name	Pin type(1)	I/O characteristic(1)	Main function (After reset)	Default alternate function(2)	Remapping function(3)
					TIM8_CH4(AF3)/I2C3_SDA(AF4)/ SPI3_MISO(AF5)/I2S2_SDI(AF5)/ TIM9_CH1(AF6)/USART7_CTS(AF8)/ QSPI1_SIO0(AF9)/LTDC_G3(AF10)/ SWPMI_SUP(AF11)/DVP_D3(AF13)/ LTDC_B2(AF14)/SAI_MCLK_B(AF15)	
39	PA11	I/O/A	FT	PA11	OTG_DM/TIM1_CH4(AF1)/ USART3_CK(AF4)/SPI2_NSS(AF5)/ I2S1_WS(AF5)/USART2_RX(AF6)/ USART1_CTS(AF7)/CAN1_RX(AF9)/ LTDC_R4(AF14)	
40	PA12	I/O/A	FT	PA12	OTG_DP/TIM1_ETR(AF1)/ USART3_RTS(AF4)/SPI2_SCK(AF5)/ I2S1_CK(AF5)/USART6_TX(AF6)/ USART1_RTS(AF7)/CAN1_TX(AF9)/ TIM1_BKIN2(AF12)/LTDC_R5(AF14)/	
41	PA13	I/O	-	PA13	SPI3_MOSI(AF1)/I2S2_SDO(AF1)/ USART3_TX(AF4)/CAN_RX(AF5)/ I2C3_SDA(AF7)/LTDC_B2(AF8)/ SAI_SD_B(AF13)/	
42	PA14	I/O	-	PA14	SDMMC_D4(5)/SPI3_SCK(AF1)/ I2S2_CK(AF1)/USART3_RX(AF4)/ CAN_TX(AF5)/I2C3_SCL(AF7)/ USART8_CK(AF11)/SAI_SCK_B(AF13)/ LTDC_B6(AF14)/LTDC_R0(AF15)	SDMMC_D4_1(5)
43	PA15	I/O	-	PA15	SDMMC_D5(5)/TIM2_CH1_ETR(AF1)/ USART3_CTS(AF4)/SPI1_NSS(AF5)/ SPI3_NSS(AF6)/I2S2_WS(AF6)/ I2C3_SMBA(AF7)/USART6_RTS(AF8)/ LTDC_R3(AF9)/LTDC_B4(AF10)/ USART8_TX(AF11)/SAI_FS_B(AF13)/ LTDC_B6(AF14)/LTDC_CLK(AF15)	SDMMC_D5_1(5)
44	PC10	I/O	-	PC10	SDMMC_D2(5)/TIM9_CH2(AF2)/ SPI3_SCK(AF6)/I2S2_CK(AF6)/ USART3_TX(AF7)/USART6_TX(AF8)/ QSPI1_SIO1(AF9)/LTDC_B1(AF10)/ SWPMI_RX(AF11)/DVP_D8(AF13)/ LTDC_R2(AF14)/LTDC_HSYNC(AF15)	SDMMC_STS_2/ SDMMC_STS_3/ SDMMC_CMD_2 / SDMMC_CMD_3

Pin No. H416RDU6	Pin name	Pin type(1)	I/O characteristic(1)	Main function (After reset)	Default alternate function(2)	Remapping function(3)
45	PC11	I/O	-	PC11	SDMMC_D3(5)/TIM9_CH4(AF2)/ SPI3_MISO(AF6)/I2S2_SDI(AF6)/ USART3_RX(AF7)/USART6_RX(AF8)/ QSPI1_SCSXN(AF9)/DVP_D4(AF13)/ LTDC_B4(AF14)/LTDC_VSYNC(AF15)	SDMMC_STR_2/ SDMMC_STR_3
46	PC12	I/O	-	PC12	SDMMC_SDCK/SDMMC_SLVCK/ TIM9_CH3(AF2)/SPI3_MOSI(AF6)/ I2S2_SDO(AF6)/USART3_CK(AF7)/ USART7_TX(AF8)/DVP_D9(AF13)/ LTDC_R6(AF14)/LTDC_DE(AF15)	SDMMC_SDCK_ 2/ SDMMC_SDCK_ 3/ SDMMC_SLVCK _2/ SDMMC_SLVCK _3
47	PD2	I/O	-	PD2	SDMMC_STS/SDMMC_CMD/ TIM3_ETR(AF2)/USART7_RX(AF8)/ LTDC_B7(AF9)/DVP_D11(AF13)/ LTDC_B2(AF14)/LTDC_R5(AF15)	SDMMC_D2_2(5)/ SDMMC_D2_3(5)
48	PD3	I/O	-	PD3	SDMMC_STR/TIM11_CH1(AF2)/ DFSDM_CKOUT(AF3)/SPI2_SCK(AF5)/ I2S1_CK(AF5)/USART2_CTS(AF7)/ USART6_CK(AF8)/TIM3_CH1(AF9)/ DVP_D5(AF13)/LTDC_G7(AF14)/ LTDC_R6(AF15)	SDMMC_D3_2(5)/ SDMMC_D3_3(5)
49	PB3	I/O	-	PB3	TIM2_CH2(AF1)/CC1(AF4)/ SPI1_SCK(AF5)/SPI3_SCK(AF6)/ I2S2_CK(AF6)/SDIO_D2(AF9)/ USART8_RX(AF11)/DVP_D5(AF13)/ TIM12_ETR(AF14)	
50	PB4	I/O	-	PB4	TIM3_CH1(AF2)/CC2(AF4)/ SPI1_MISO(AF5)/ SPI3_MISO(AF6)/I2S2_SDI(AF6)/ SPI2_NSS(AF7)/I2S1_WS(AF7)/ SDIO_D3(AF9)/TIM4_ETR(AF10)/ USART8_TX(AF11)/ USART7_CK(AF14)	
51	PB5	I/O	FT	PB5	TIM10_ETR(AF0)/TIM3_CH2(AF2)/ LTDC_B5(AF3)/I2C1_SMBA(AF4)/ SPI1_MOSI(AF5)/I2C4_SMBA(AF6)/	

Pin No. H416RDU6	Pin name	Pin type(1)	I/O characteristic(1)	Main function (After reset)	Default alternate function(2)	Remapping function(3)
					SPI3_MOSI(AF7)/I2S2_SDO(AF7)/ SPI2_MCK(AF8)/CAN2_RX(AF9)/ DVP_D10(AF13)/USART7_RX(AF14)	
52	PB6	I/O	FT	PB6	TIM10_CH1(AF0)/FSMC_A5(AF1)/ TIM4_CH1(AF2)/CAN1_RX(AF3)/ I2C1_SCL(AF4)/SPI3_MCK(AF5)/ I2C4_SCL(AF6)/USART1_TX(AF7)/ CAN2_TX(AF9)/QSPI1_SCSN(AF10)/ DVP_D5(AF13)/USART7_TX(AF14)	
53	PB7	I/O	FT	PB7	TIM10_CH2(AF0)/TIM4_CH2(AF2)/ CAN1_TX(AF3)/I2C1_SDA(AF4)/ I2C4_SDA(AF6)/USART1_RX(AF7)/ USART8_CK(AF10)/ DVP_VSYNC(AF13)	
54	PB8	I/O/A	FT	PB8	SWCLK/USBHS_DP/TIM10_CH3(AF1)/ TIM4_CH3(AF2)/I2C1_SCL(AF4)/ PIOC_IO0(AF5)/I2C4_SCL(AF6)/ USART6_RX(AF8)/CAN1_RX(AF9)/ SDIO_D4(AF10)/DVP_D6(AF13)/ LTDC_B6(AF14)	
55	PB9	I/O/A	-	PB9	SWIO/SWDIO/USBHS_DM/ TIM10_CH4(AF1)/TIM4_CH4(AF2)/ I2C1_SDA(AF4)/SPI2_NSS(AF5)/ I2S1_WS(AF5)/I2C4_SDA(AF6)/ PIOC_IO1(AF7)/USART6_TX(AF8)/ CAN1_TX(AF9)/SDIO_D5(AF10)/ I2C4_SMBA(AF11)/DVP_D7(AF13)/ LTDC_B7(AF14)	
56	SSTXB(4)	USB3.0	-	SSTXB		
57	SSTXA(4)	USB3.0	-	SSTXA		
58	V_{DD12A}	P	-	V_{DD12A}		
59	SSRXB(4)	USB3.0	-	SSRXB		
60	SSRXA(4)	USB3.0	-	SSRXA		

Note 1: Explanation of table abbreviations:

I = TTL/CMOS level Schmitt input; O = CMOS level tri-state output; A = analog signal input or output; P = power supply; FT = tolerant 5V.

Note 2: The I/O pins are connected to the on-board peripherals/modules through a multiplexer that allows only one peripheral's multiplexing function (AF) to be connected to the I/O pins at a time. The multiplexer utilizes up to

16 multiplexing function inputs (AF0 to AF15), which can be configured through the GPIOx_AFLR and GPIOx_AFHR registers: after reset, the multiplexer selects for multiplexing function 0, i.e. (AF0). For more detailed information, please refer to the Multiplexing Function I/O section and the Debug Setup section of the CH32H417RM manual.

Note 3: The value after the remapping function underline indicates the configuration value of the corresponding bit in the AFIO_PCFR1 register. For example, UHSIF_CLK_1 indicates that the corresponding bit of the register is configured as 01b.

Note 4: USB3.0 pin signals support positive and negative identification and exchange, PCB alignment should refer to the USB specification for impedance matching to avoid over-hole. SSRXA/SSRXB default connection to each other TXP/TXN, support cross-connect TXN/TXP, SSTXA/SSTXB default connection to each other RXP/RXN, support cross-connect RXN/RXP.

Note 5: When SDMMC is used in 1-wire or 4-wire mode, the GPIO pins corresponding to the unused data lines cannot be used as multiplexed outputs; they can be used as multiplexed inputs or as GPIO outputs.

Table 2-1-3 CH32H415 Pin definitions

Pin No. H415REU6	Pin name	Pin type(1)	I/O characteristic(1)	Main function (After reset)	Remapping function(3)
0	V_{SS}	P	-	V_{SS}	
1	PE3	I/O	-	PE3	TIM8_CH1(AF0)/TIM4_CH1(AF2)/ TIM12_CH1(AF3)/PIOC_IO0(AF5)/ SAI_SD_B(AF6)/USART5_TX(AF11)/ DVP_D3(AF13)
2	PE4	I/O	-	PE4	TIM8_CH2(AF0)/ TIM4_CH2(AF2)/TIM12_CH2(AF3)/ PIOC_IO1(AF4)/SPI4_NSS(AF5)/ SAI_FS_A(AF6)/DVP_D4(AF13)/ LTDC_B0(AF14)
3	PE5	I/O	-	PE5	TIM8_CH3(AF0)/ TIM4_CH3(AF2)/TIM12_CH3(AF3)/ TIM9_CH3(AF4)/SPI4_MISO(AF5)/ SAI_SCK_A(AF6)/DVP_D6(AF13)/ LTDC_G0(AF14)
4	PE6	I/O	-	PE6	TIM8_CH4(AF0)/ TIM1_BKIN2(AF1)/TIM4_CH4(AF2)/ TIM12_CH4(AF3)/TIM9_CH4(AF4)/ SPI4_MOSI(AF5)/SAI_SD_A(AF6)/ USART8_CK(AF8)/CMP_OUT(AF11)/ DVP_D7(AF13)/LTDC_G1(AF14)
5	V_{DDK}	P	-	V_{DDK}	
6	V_{DD33}	P	-	V_{DD33}	Main V_{DD33}
7	XI	I/A	-	XI	
8	XO	O/A	-	XO	
9	PC0	I/O/A	-	PC0	ADC_IN10/HSADC_IN0/ TIM8_BKIN(AF0)/DFSDM_CKIN0(AF3)/ PIOC_IO1(AF5)/SAI_MCLK_A(AF7)/ I2C2_SCL(AF9)/QSPI2_SIO3(AF10)/ LTDC_G2(AF11)/LTDC_R5(AF14)/
10	PC1	I/O/A	-	PC1	ADC_IN11/HSADC_IN1/ TIM8_CH1N(AF0)/TIM5_CH1(AF2)/ DFSDM_DATIN0(AF3)/SPI2_MOSI(AF5)/ I2S1_SDO(AF5)/SAI_SD_A(AF7)/ PIOC_IO0(AF7)/I2C2_SDA(AF9)/

Pin No. H415REU6	Pin name	Pin type(1)	I/O characteristic(1)	Main function (After reset)	Remapping function(3)
					QSPI2_SCSXN(AF10)/ SDIO_CK(AF11)/LTDC_G5(AF14)/
11	PC2	I/O/A	-	PC2	ADC_IN12/HSADC_IN2/OPA3_P0/ TIM8_CH2N(AF0)/TIM5_CH2(AF2)/ DFSDM_CKIN1(AF3)/SPI2_MISO(AF5)/ I2S1_SDI(AF5)/DFSDM_CKOUT(AF6)/ SAI_SCK_A(AF7)/PIOC_IO1(AF8)/ I2C2_SMBA(AF9)/QSPI2_SIOX0(AF10)
12	PC3	I/O/A	-	PC3	ADC_IN13/HSADC_IN3/ OPA3_N0/TIM8_CH3N(AF0)/ TIM5_CH3(AF2)/DFSDM_DATIN1(AF3)/ SPI2_MOSI(AF5)/I2S1_SDO(AF5)/ SAI_FS_A(AF7)/QSPI2_SIOX1(AF10)
13	V_{DD33A}	P	-	V_{DD33A}	
14	PA0	I/O/A	-	PA0	ADC_IN0/OPA3_OUT0/ TIM2_CH1_ETR(AF1)/TIM5_CH1(AF2)/ TIM8_ETR(AF3)/QSPI2_SIOX2(AF4)/ IO2W_IO0(AF5)/TIM9_CH1(AF6)/ USART2_CTS(AF7)/USART6_TX(AF8)/ SDIO_CMD(AF9)/LTDC_R0(AF14)/
15	PA1	I/O/A	-	PA1	ADC_IN1/TIM2_CH2(AF1)/ TIM5_CH2(AF2)/QSPI2_SIOX3(AF4)/ TIM9_CH2(AF6)/USART2_RTS(AF7)/ USART6_RX(AF8)/QSPI1_SIO3(AF9)/ LTDC_R2(AF14)
16	PA2	I/O/A	-	PA2	ADC_IN2/OPA3_P1/TIM2_CH3(AF1)/ TIM5_CH3(AF2)/USART6_CK(AF3)/ TIM9_CH3(AF4)/USART2_TX(AF7)/ LTDC_R1(AF14)
17	PA3	I/O/A	-	PA3	ADC_IN3/OPA3_N1/TIM2_CH4(AF1)/ TIM5_CH4(AF2)/TIM9_CH4(AF4)/ USART2_RX(AF7)/TIM10_CH3(AF8)/ LTDC_B2(AF9)/LTDC_B5(AF14)
18	PA4	I/O/A	-	PA4	ADC_IN4/DAC1_OUT/OPA3_OUT1/ TIM5_ETR(AF2)/TIM9_ETR(AF4)/ SPI1_NSS(AF5)/SPI3_NSS(AF6)/ I2S2_WS(AF6)/USART2_CK(AF7)/ TIM10_CH4(AF9)/DVP_HSYNC(AF13)/

Pin No. H415REU6	Pin name	Pin type(1)	I/O characteristic(1)	Main function (After reset)	Remapping function(3)
					LTDC_VSYNC(AF14)
19	PA5	I/O/A	-	PA5	ADC_IN5/DAC2_OUT/OPA1_OUT1/ TIM2_CH1_ETR(AF1)/TIM1_BKIN2(AF2)/ TIM8_CH1N(AF3)/SPI1_SCK(AF5)/ TIM10_ETR(AF9)/DVP_VSYNC(AF11)/ LTDC_R4(AF14)
20	PA6	I/O/A	-	PA6	ADC_IN6/OPA1_P1/TIM1_BKIN(AF1)/ TIM3_CH1(AF2)/TIM8_BKIN(AF3)/ SPI1_MISO(AF5)/TIM10_CH1(AF9)/ CMP_OUT(AF10)/LTDC_HSYNC(AF11)/ DVP_PCLK(AF13)/LTDC_G2(AF14)
21	PA7	I/O/A	-	PA7	ADC_IN7/OPA1_N1/TIM1_CH1N(AF1)/ TIM3_CH2(AF2)/TIM8_CH1N(AF3)/ SPI1_MOSI(AF5)/TIM10_CH2(AF9)/ LTDC_VSYNC(AF14)/
22	PC4	I/O/A	-	PC4	ADC_IN14/OPA1_OUT0/CMP_N1/ CAN3_RX(AF6)/I3C_SCL(AF7)/ LTDC_R7(AF14)
23	PB0	I/O/A	-	PB0	ADC_IN8/OPA1_P0/CMP_P0/MCO(AF0)/ TIM1_CH2N(AF1)/TIM3_CH3(AF2)/ TIM8_CH2N(AF3)/TIM5_CH4(AF4)/ DFSDM_CKOUT(AF6)/USART6_CTS(AF8) / LTDC_R3(AF9)/TIM12_ETR(AF13)/ LTDC_G1(AF14)
24	PB1	I/O/A	-	PB1	ADC_IN9/OPA1_N0/CMP_N0/ TIM1_CH3N(AF1)/TIM3_CH4(AF2)/ TIM8_CH3N(AF3)/TIM12_CH1(AF5)/ DFSDM_DATIN1(AF6)/LTDC_R6(AF9)/ LTDC_G0(AF14)
25	PE11	I/O	-	PE11	TIM1_CH2(AF1)/SPI4_NSS(AF5)/ QSPI2_SCSN(AF7)/SDIO_D3(AF8)/ LTDC_G3(AF14)
26	PE12	I/O	-	PE12	TIM1_CH3N(AF1)/SPI4_SCK(AF5)/ QSPI2_SIO0(AF7)/SDIO_D4(AF8)/ CMP_OUT(AF13)/LTDC_B4(AF14)/
27	PE13	I/O	-	PE13	TIM1_CH3(AF1)/ TIM12_CH2(AF2)/SPI4_MISO(AF5)/

Pin No. H415REU6	Pin name	Pin type(1)	I/O characteristic(1)	Main function (After reset)	Remapping function(3)
					QSPI2_SIO1(AF7)/SDIO_D5(AF8)/ LTDC_DE(AF14)/
28	PE14	I/O	-	PE14	TIM1_CH4(AF1)/TIM12_CH3(AF2)/ I3C_SCL(AF3)/SPI4_MOSI(AF5)/ QSPI2_SIO2(AF7)/SDIO_D6(AF8)/ LTDC_CLK(AF13)
29	PE15(3)	I/O	-	PE15	TIM1_BKIN(AF1)/TIM12_CH4(AF2)/ I3C_SDA(AF3)/QSPI2_SIO3(AF7)/ SDIO_D7(AF8)/USART5_CK(AF11)/ CMP_OUT(AF13)/LTDC_R7(AF14)/
	PB10(3)	I/O	-	PB10	TIM2_CH3(AF1)/TIM9_CH2(AF2)/ LPTIM2_CH1(AF3)/I2C2_SCL(AF4)/ SPI2_SCK(AF5)/I2S1_CK(AF5)/ USART3_TX(AF7)/SDIO_CMD(AF8)/ USART6_CK(AF9)/QSPI2_SCSXN(AF11)/ LTDC_G4(AF14)
30	PB11	I/O	-	PB11	TIM2_CH4(AF1)/LPTIM2_ETR(AF3)/ I2C2_SDA(AF4)/USART3_RX(AF7)/ SDIO_CK(AF8)/TIM9_CH4(AF9)/ QSPI2_SIOX0(AF11)/LTDC_G5(AF14)
31	V_{DD33}	P	-	V_{DD33}	
32	PB12	I/O	-	PB12	TIM1_BKIN(AF1)/TIM8_BKIN(AF2)/ I2C2_SMBA(AF4)/SPI2_NSS(AF5)/ I2S1_WS(AF5)/DFSDM_DATIN1(AF6)/ USART3_CK(AF7)/TIM9_CH3(AF8)/ CAN2_RX(AF9)/LTDC_VSYNC(AF10)/ QSPI2_SIOX1(AF11)/ CMP_OUT(AF13)/USART7_RX(AF14)/ DVP_PCLK(AF15)
33	PB13	I/O	-	PB13	TIM1_CH1N(AF1)/TIM8_BKIN2(AF2)/ LPTIM2_OC(AF3)/TIM9_ETR(AF4)/ SPI2_SCK(AF5)/I2S1_CK(AF5)/ DFSDM_CKIN1(AF6)/ USART3_CTS(AF7)/DVP_HSYNC(AF8)/ CAN2_TX(AF9)/QSPI2_SIOX0(AF11)/ DVP_D2(AF13)/USART7_TX(AF14)/
34	PB14	I/O	-	PB14	TIM1_CH2N(AF1)/TIM9_CH1(AF2)/ TIM8_CH2N(AF3)/USART1_TX(AF4)/

Pin No. H415REU6	Pin name	Pin type(1)	I/O characteristic(1)	Main function (After reset)	Remapping function(3)
					SPI2_MISO(AF5)/I2S1_SDI(AF5)/ LTDC_G0(AF6)/USART3_RTS(AF7)/ USART6_RTS(AF8)/SDIO_D0(AF9)/ QSPI2_SIOX1(AF11)/USART7_CK(AF13)/ LTDC_CLK(AF14)/DVP_VSYNC(AF15)
35	PB15	I/O	FT	PB15	TIM1_CH3N(AF1)/TIM9_CH2(AF2)/ TIM8_CH3N(AF3)/USART1_RX(AF4)/ SPI2_MOSI(AF5)/I2S1_SDO(AF5)/ USART6_CTS(AF8)/SDIO_D1(AF9)/ LTDC_G7(AF14)
36	PC6	I/O	-	PC6	TIM3_CH1(AF2)/TIM8_CH1(AF3)/ SPI2_MCK(AF5)/USART4_TX(AF7)/ SDIO_D6(AF9)/SWPMI_IO(AF11)/ DVP_D0(AF13)/LTDC_HSYNC(AF14)
37	PC7	I/O	-	PC7	TIM3_CH2(AF2)/TIM8_CH2(AF3)/ SPI3_MCK(AF6)/USART4_RX(AF7)/ SDIO_D7(AF9)/SWPMI_TX(AF11)/ DVP_D1(AF13)/LTDC_G6(AF14)
38	PC8	I/O	-	PC8	TIM3_CH3(AF2)/TIM8_CH3(AF3)/ TIM9_ETR(AF6)/USART4_CK(AF7)/ USART7_RTS(AF8)/SWPMI_RX(AF11)/ DVP_D2(AF13)/LTDC_G4(AF14)
39	PC9	I/O	-	PC9	TIM3_CH4(AF2)/TIM8_CH4(AF3)/ I2C3_SDA(AF4)/SPI3_MISO(AF5)/ I2S2_SDI(AF5)/TIM9_CH1(AF6)/ USART7_CTS(AF8)/QSPI1_SIO0(AF9)/ LTDC_G3(AF10)/SWPMI_SUP(AF11)/ DVP_D3(AF13)/LTDC_B2(AF14)/ SAI_MCLK_B(AF15)
40	PA9	I/O/A	FT	PA9	OTG_VBUS/TIM1_CH2(AF1)/ I2C3_SMBA(AF4)/SPI2_SCK(AF5)/ I2S1_CK(AF5)/USART1_TX(AF7)/ DVP_D0(AF13)/LTDC_R5(AF14)
41	PA10	I/O/A	FT	PA10	OTG_ID/TIM1_CH3(AF1)/ USART6_CK(AF6)/USART1_RX(AF7)/ LTDC_B4(AF12)/DVP_D1(AF13)/ LTDC_B1(AF14)
42	PA11	I/O/A	FT	PA11	OTG_DM/TIM1_CH4(AF1)/

Pin No. H415REU6	Pin name	Pin type(1)	I/O characteristic(1)	Main function (After reset)	Remapping function(3)
					USART3_CK(AF4)/SPI2_NSS(AF5)/ I2S1_WS(AF5)/USART2_RX(AF6)/ USART1_CTS(AF7)/CAN1_RX(AF9)/ LTDC_R4(AF14)
43	PA12	I/O/A	FT	PA12	OTG_DP/TIM1_ETR(AF1)/ USART3_RTS(AF4)/SPI2_SCK(AF5)/ I2S1_CK(AF5)/USART6_TX(AF6)/ USART1_RTS(AF7)/CAN1_TX(AF9)/ TIM1_BKIN2(AF12)/LTDC_R5(AF14)
44	PA13	I/O	-	PA13	SPI3_MOSI(AF1)/I2S2_SDO(AF1)/ USART3_TX(AF4)/CAN_RX(AF5)/ I2C3_SDA(AF7)/LTDC_B2(AF8)/ SAI_SD_B(AF13)
45	PA14	I/O	-	PA14	SPI3_SCK(AF1)/I2S2_CK(AF1)/ USART3_RX(AF4)/CAN_TX(AF5)/ I2C3_SCL(AF7)/USART8_CK(AF11)/ SAI_SCK_B(AF13)/LTDC_B6(AF14)/ LTDC_R0(AF15)
46	PA15	I/O	-	PA15	TIM2_CH1_ETR(AF1)/USART3_CTS(AF4)/ SPI1_NSS(AF5)/SPI3_NSS(AF6)/ I2S2_WS(AF6)/I2C3_SMBA(AF7)/ USART6_RTS(AF8)/LTDC_R3(AF9)/ LTDC_B4(AF10)/USART8_TX(AF11)/ SAI_FS_B(AF13)/LTDC_B6(AF14)/ LTDC_CLK(AF15)
47	PC10	I/O	-	PC10	TIM9_CH2(AF2)/SPI3_SCK(AF6)/ I2S2_CK(AF6)/USART3_TX(AF7)/ USART6_TX(AF8)/QSPI1_SIO1(AF9)/ LTDC_B1(AF10)/SWPMI_RX(AF11)/ DVP_D8(AF13)/LTDC_R2(AF14)/ LTDC_HSYNC(AF15)
48	PC11	I/O	-	PC11	TIM9_CH4(AF2)/SPI3_MISO(AF6)/ I2S2_SDI(AF6)/USART3_RX(AF7)/ USART6_RX(AF8)/QSPI1_SCSXN(AF9)/ DVP_D4(AF13)/LTDC_B4(AF14)/ LTDC_VSYNC(AF15)
49	PC12	I/O	-	PC12	TIM9_CH3(AF2)/SPI3_MOSI(AF6)/ I2S2_SDO(AF6)/USART3_CK(AF7)/

Pin No. H415REU6	Pin name	Pin type(1)	I/O characteristic(1)	Main function (After reset)	Remapping function(3)
					USART7_TX(AF8)/DVP_D9(AF13)/ LTDC_R6(AF14)/LTDC_DE(AF15)
50	PD3	I/O	-	PD3	TIM11_CH1(AF2)/ DFSDM_CKOUT(AF3)/SPI2_SCK(AF5)/ I2S1_CK(AF5)/USART2_CTS(AF7)/ USART6_CK(AF8)/TIM3_CH1(AF9)/ DVP_D5(AF13)/LTDC_G7(AF14)/ LTDC_R6(AF15)
51	PF3	I/O	-	PF3	CAN3_TX(AF2)/SPI1_MISO(AF5)/ USART4_RX(AF7)/QSPI1_SIOX2(AF9)/ DVP_D9(AF11)/DVP_VSYNC(AF13)/ LTDC_B0(AF14)/LTDC_G5(AF15)
52	PF4	I/O	-	PF4	LPTIM1_ETR(AF1)/CAN3_RX(AF2)/ SPI1_NSS(AF5)/USART4_TX(AF7)/ LTDC_G3(AF9)/DVP_D8(AF11)/ DVP_D2(AF13)/LTDC_B2(AF14)/ LTDC_G6(AF15)
53	PF5	I/O	-	PF5	LPTIM1_CH2(AF1)/USART5_RX(AF4)/ SPI1_SCK(AF5)/QSPI1_SIOX3(AF9)/ DVP_D3(AF13)/LTDC_B3(AF14)/ LTDC_G7(AF15)
54	PE0	I/O	-	PE0	LPTIM1_CH1(AF1)/USART5_TX(AF4)/ USART4_RTS(AF7)/LTDC_B4(AF9)/ DVP_D0(AF11)/TIM11_CH1(AF13)/ LTDC_B1(AF14)/LTDC_B3(AF15)
55	PB3	I/O	-	PB3	TIM2_CH2(AF1)/CC1(AF4)/ SPI1_SCK(AF5)/SPI3_SCK(AF6)/ I2S2_CK(AF6)/SDIO_D2(AF9)/ USART8_RX(AF11)/DVP_D5(AF13)/ TIM12_ETR(AF14)
56	PB4	I/O	-	PB4	TIM3_CH1(AF2)/CC2(AF4)/ SPI1_MISO(AF5)/SPI3_MISO(AF6)/ I2S2_SDI(AF6)/SPI2_NSS(AF7)/ I2S1_WS(AF7)/SDIO_D3(AF9)/ TIM4_ETR(AF10)/USART8_TX(AF11)/ USART7_CK(AF14)
57	PB6	I/O	FT	PB6	TIM10_CH1(AF0)/TIM4_CH1(AF2)/ CAN1_RX(AF3)/I2C1_SCL(AF4)/

Pin No. H415REU6	Pin name	Pin type(1)	I/O characteristic(1)	Main function (After reset)	Remapping function(3)
					SPI3_MCK(AF5)/I2C4_SCL(AF6)/ USART1_TX(AF7)/CAN2_TX(AF9)/ QSPI1_SCSN(AF10)/DVP_D5(AF13)/ USART7_TX(AF14)
58	PB7	I/O	FT	PB7	TIM10_CH2(AF0)/TIM4_CH2(AF2)/ CAN1_TX(AF3)/I2C1_SDA(AF4)/ I2C4_SDA(AF6)/USART1_RX(AF7)/ USART8_CK(AF10)/DVP_VSYNC(AF13)
59	PB8	I/O/A	-	PB8	SWCLK/USBHS_DP/TIM10_CH3(AF1)/ TIM4_CH3(AF2)/I2C1_SCL(AF4)/ PIOC_IO0(AF5)/I2C4_SCL(AF6)/ USART6_RX(AF8)/CAN1_RX(AF9)/ SDIO_D4(AF10)/DVP_D6(AF13)/ LTDC_B6(AF14)
60	PB9	I/O/A	-	PB9	SWIO/SWDIO/USBHS_DM/ TIM10_CH4(AF1)/TIM4_CH4(AF2)/ I2C1_SDA(AF4)/SPI2_NSS(AF5)/ I2S1_WS(AF5)/I2C4_SDA(AF6)/ PIOC_IO1(AF7)/USART6_TX(AF8)/ CAN1_TX(AF9)/SDIO_D5(AF10)/ I2C4_SMBA(AF11)/DVP_D7(AF13)/ LTDC_B7(AF14)

Note 1: Explanation of table abbreviations:

I = TTL/CMOS level Schmitt input; O = CMOS level tri-state output; A = analog signal input or output;

P = power supply; FT = tolerant 5V; USB3.0 = USB3.0 signal; ETH = Ethernet signal; SDP = SerDes PHY signal.

Note 2: The I/O pins are connected to the on-board peripherals/modules through a multiplexer that allows only one peripheral's multiplexing function (AF) to be connected to the I/O pins at a time. The multiplexer utilizes up to 16 multiplexing function inputs (AF0 to AF15), which can be configured through the GPIOx_AFLR and GPIOx_AFHR registers: after reset, the multiplexer selects for multiplexing function 0, i.e. (AF0). For more detailed information, please refer to the Multiplexing Function I/O section and the Debug Setup section of the CH32H417RM manual.

Note 3: For the CH32H415REU6 chip, the PB10 and PE15 pins are short-connected inside the chip, and the configuration of both IOs is prohibited as output functions.

2.3 Pin Alternate Function

Note that the pin function descriptions in the following table are for all functions and do not relate to specific models. There are differences in peripheral resources between different models, please check whether this function is available according to the product model resource table before checking.

Note: When pins are configured as multiplexed inputs through the multiplexer, there is a priority level for the optional pins of the same peripheral (The optional pins in the same row in each of the following tables are listed in descending order of priority). When a low-priority pin is selected as a multiplexed input for a peripheral, a high-priority pin of the same peripheral must not be configured as a multiplexed function of that peripheral at the same time. Example: PE9 (AF1) and PA8 (AF1) are both optional pins for the TIM1_CH1 function, and the PE9 pin has a higher priority. If PA8 pin is used as TIM1_CH1, PE9 pin should be avoided to be configured as AF1.

Table 2-2-1 ADC Pin functions

ADC function	Default pin
ADC_IN0	PA0
ADC_IN1	PA1
ADC_IN2	PA2
ADC_IN3	PA3
ADC_IN4	PA4
ADC_IN5	PA5
ADC_IN6	PA6
ADC_IN7	PA7
ADC_IN8	PB0
ADC_IN9	PB1
ADC_IN10	PC0
ADC_IN11	PC1
ADC_IN12	PC2
ADC_IN13	PC3
ADC_IN14	PC4
ADC_IN15	PC5
ADC_IN16	Temperature sensor
ADC_IN17	Internal reference voltage V_{REFINT}

Table 2-2-2 HSADC Pin functions

HSADC function	Default pin
HSADC_IN0	PC0
HSADC_IN1	PC1
HSADC_IN2	PC2

HSADC_IN3	PC3
HSADC_IN4	PF8
HSADC_IN5	PF9
HSADC_IN6	PF10

Table 2-2-3 DAC Pin functions

DAC1 function	Default pin
DAC1_OUT	PA4
DAC2 function	**Default pin**
DAC2_OUT	PA5

Table 2-2-4 TIM Pin functions

TIM1 function	Optional pins
TIM1_ETR	PE7(AF1), PA12(AF1)
TIM1_CH1	PE9(AF1), PA8(AF1)
TIM1_CH2	PE11(AF1), PA9(AF1)
TIM1_CH3	PE13(AF1), PA10(AF1)
TIM1_CH4	PE14(AF1), PA11(AF1)
TIM1_CH1N	PE8(AF1), PA7(AF1), PB13(AF1)
TIM1_CH2N	PE10(AF1), PB0(AF1), PB14(AF1)
TIM1_CH3N	PE12(AF1), PB1(AF1), PB15(AF1)
TIM1_BKIN	PE15(AF1), PA6(AF1), PB12(AF1)
TIM1_BKIN2	PE6(AF1), PA5(AF2), PA12(AF12)
TIM8 function	**Optional pins**
TIM8_ETR	PA0(AF3), PF2(AF3)
TIM8_CH1	PC6(AF3), PE3(AF0)
TIM8_CH2	PC7(AF3), PE4(AF0)
TIM8_CH3	PC8(AF3), PE5(AF0)
TIM8_CH4	PC9(AF3), PE6(AF0)
TIM8_CH1N	PA7(AF3), PA5(AF3), PC1(AF0)
TIM8_CH2N	PB0(AF3), PB14(AF3), PC2(AF0)
TIM8_CH3N	PB1(AF3), PB15(AF3), PC3(AF0)
TIM8_BKIN	PA6(AF3), PB12(AF2), PC0(AF0)
TIM8_BKIN2	PA8(AF3) PB13(AF2)
TIM2 function	**Optional pins**
TIM2_CH1_ETR	PA0(AF1), PA5(AF1), PA15(AF1)
TIM2_CH2	PA1(AF1) PB3(AF1)
TIM2_CH3	PA2(AF1), PB10(AF1)

TIM2_CH4	PA3(AF1), PB11(AF1)
TIM3 function	Optional pins
TIM3_ETR	PD2(AF2)
TIM3_CH1	PA6(AF2), PB4(AF2), PC6(AF2), PD3(AF9)
TIM3_CH2	PA7(AF2), PB5(AF2), PC7(AF2), PD4(AF9)
TIM3_CH3	PB0(AF2), PC8(AF2), PD5(AF9)
TIM3_CH4	PB1(AF2), PC9(AF2), PD6(AF9)
TIM4 function	Optional pins
TIM4_ETR	PB4(AF10)
TIM4_CH1	PB6(AF2), PD12(AF2), PE3(AF2)
TIM4_CH2	PB7(AF2), PD13(AF2), PE4(AF2)
TIM4_CH3	PB8(AF2), PD14(AF2), PE5(AF2)
TIM4_CH4	PB9(AF2), PD15(AF2), PE6(AF2)
TIM5 function	Optional pins
TIM5_ETR	PA4(AF2), PD11(AF6)
TIM5_CH1	PA0(AF2), PD12(AF6), PC1(AF2)
TIM5_CH2	PA1(AF2), PD13(AF6), PC2(AF2)
TIM5_CH3	PA2(AF2), PD14(AF6), PC3(AF2)
TIM5_CH4	PA3(AF2), PD15(AF6), PB0(AF4)
TIM9 function	Optional pins
TIM9_ETR	PB13(AF4), PA4(AF4), PC8(AF6)
TIM9_CH1	PB14(AF2), PA0(AF6), PC9(AF6)
TIM9_CH2	PB15(AF2), PA1(AF6), PC10(AF2), PB10(AF2)
TIM9_CH3	PE5(AF4), PA2(AF4), PC12(AF2), PB12(AF8)
TIM9_CH4	PE6(AF4), PA3(AF4), PC11(AF2), PB11(AF9)
TIM10 function	Optional pins
TIM10_ETR	PF10(AF8), PA5(AF9), PB5(AF0)
TIM10_CH1	PF8(AF9), PA6(AF9), PB6(AF0)
TIM10_CH2	PF9(AF9), PA7(AF9), PB7(AF0)
TIM10_CH3	PF6(AF9), PA3(AF8), PB8(AF1)
TIM10_CH4	PF7(AF9), PA4(AF9), PB9(AF1)
TIM11 function	Optional pins
TIM11_ETR	PB2(AF13), PD5(AF13)
TIM11_CH1	PD3(AF2), PF6(AF13), PE0(AF13)
TIM11_CH2	PD4(AF2), PF7(AF13), PE1(AF13)
TIM11_CH3	PD5(AF2), PF8(AF13), PD7(AF13)
TIM11_CH4	PD6(AF2), PF9(AF13)

TIM12 function	Optional pins
TIM12_ETR	PB0(AF13), PB3(AF14)
TIM12_CH1	PB1(AF5), PE3(AF3)
TIM12_CH2	PB2(AF5), PE4(AF3), PE13(AF2)
TIM12_CH3	PF12(AF13), PE5(AF3), PE14(AF2)
TIM12_CH4	PF13(AF13), PE6(AF3), PE15(AF2)

Table 2-2-5 LPTIM Pin functions

LPTIM1 function	Optional pins
LPTIM1_ETR	PF4(AF1), PD11(AF1)
LPTIM1_CH1	PE0(AF1), PD12(AF1)
LPTIM1_CH2	PF5(AF1), PD14(AF1)
LPTIM1_OC	PE1(AF1), PD13(AF1)
LPTIM2 function	**Optional pins**
LPTIM2_ETR	PB11(AF3), PD10(AF4)
LPTIM2_CH1	PB10(AF3), PD12(AF3)
LPTIM2_CH2	PD11(AF3), PB12(AF13)
LPTIM2_OC	PB13(AF3)

Table 2-2-6 I2C Pin functions

I2C1 function	Optional pins
I2C1_SCL	PB6(AF4), PB8(AF4)
I2C1_SDA	PB7(AF4) PB9(AF4)
I2C1_SMBA	PB5(AF4)
I2C2 function	**Optional pins**
I2C2_SCL	PC0(AF9), PB10(AF4)
I2C2_SDA	PC1(AF9), PB11(AF4)
I2C2_SMBA	PC2(AF9) PB12(AF4)
I2C3 function	**Optional pins**
I2C3_SCL	PA8(AF4), PA14(AF7)
I2C3_SDA	PC9(AF4), PA13(AF7)
I2C3_SMBA	PA9(AF4), PA15(AF7)
I2C4 function	**Optional pins**
I2C4_SCL	PD12(AF4), PF12(AF2), PB6(AF6), PB8(AF6)
I2C4_SDA	PD13(AF4), PF13(AF2), PB7(AF6), PB9(AF6)
I2C4_SMBA	PD11(AF4), PF11(AF2), PB5(AF6), PB9(AF11)

Table 2-2-7 I3C Pin functions

I3C function	Optional pins
I3C_SCL	PE14(AF3), PC4(AF7), PD9(AF5), PF6(AF5)
I3C_SDA	PE15(AF3), PC5(AF7), PD10(AF5), PF7(AF5)

Table 2-2-8 SPI and I2S Pin functions

SPI1 function	Optional pins
SPI1_NSS	PA4(AF5), PA15(AF5), PF4(AF5), PF6(AF3)
SPI1_SCK	PA5(AF5), PB3(AF5), PF5(AF5), PF7(AF3)
SPI1_MOSI	PA7(AF5), PB5(AF5), PD7(AF5), PF8(AF3)
SPI1_MISO	PA6(AF5), PB4(AF5), PF3(AF5), PF9(AF3)
SPI2/I2S1 function	**Optional pins**
SPI2_MCK	PC6(AF5), PB5(AF8)
SPI2_NSS/I2S1_WS	PB12(AF5), PB9(AF5), PA11(AF5)、PB4(AF7)
SPI2_SCK/I2S1_CK	PB13(AF5), PB10(AF5), PA9(AF5), PA12(AF5), PD3(AF5)
SPI2_MOSI/I2S1_SDO	PB15(AF5), PC1(AF5), PC3(AF5)
SPI2_MISO	PB14(AF5), PC2(AF5)
SPI3/I2S2 function	**Optional pins**
SPI3_MCK	PC7(AF6), PB6(AF5)
SPI3_NSS/I2S2_WS	PA4(AF6), PA15(AF6)
SPI3_SCK/I2S2_CK	PB3(AF6), PC10(AF6), PA14(AF1)
SPI3_MOSI/I2S2_SDO	PB2(AF7), PB5(AF7), PC12(AF6), PD6(AF5), PA13(AF1)
SPI3_MISO	PB4(AF6), PC11(AF6), PC9(AF5)
SPI4 function	**Optional pins**
SPI4_NSS	PE4(AF5), PE11(AF5)
SPI4_SCK	PE2(AF5), PE12(AF5)
SPI4_MOSI	PE6(AF5), PE14(AF5)
SPI4_MISO	PE5(AF5), PE13(AF5)

Table 2-2-9 USART Pin functions

USART1 function	Optional pins
USART1_CK	PA8(AF7)、PD11(AF14)
USART1_RX	PA10(AF7)、PB7(AF7)、PB15(AF4)、PD12(AF14)
USART1_TX	PA9(AF7)、PB6(AF7), PB14(AF4)、PD13(AF14)
USART1_RTS	PA12(AF7), PD14(AF14)
USART1_CTS	PA11(AF7), PD15(AF14)
USART2 function	**Optional pins**
USART2_CK	PA4(AF7), PD7(AF7)

USART2_RX	PA3(AF7), PD6(AF7)
USART2_TX	PA2(AF7), PD5(AF7)
USART2_RTS	PA1(AF7), PD4(AF7)
USART2_CTS	PA0(AF7), PD3(AF7)
USART3 function	Optional pins
USART3_CK	PB12(AF7), PC12(AF7), PD10(AF7), PA11(AF4)
USART3_RX	PB11(AF7), PC11(AF7), PD9(AF7), PA14(AF4)
USART3_TX	PB10(AF7), PC10(AF7), PD8(AF7), PA13(AF4)
USART3_RTS	PB14(AF7), PD12(AF7), PA12(AF4)
USART3_CTS	PB13(AF7), PD11(AF7), PA15(AF4)
USART4 function	Optional pins
USART4_CK	PF1(AF7), PC8(AF7)
USART4_RX	PF3(AF7), PC7(AF7)
USART4_TX	PF4(AF7), PC6(AF7)
USART4_RTS	PF2(AF7), PE0(AF7)
USART4_CTS	PF0(AF7), PE1(AF7)
USART5 function	Optional pins
USART5_CK	PE15(AF11), PD6(AF11)
USART5_RX	PE2(AF4) PF5(AF4)
USART5_TX	PE3(AF11), PE0(AF4)
USART5_RTS	PD7(AF4)
USART5_CTS	PE1(AF4)
USART6 function	Optional pins
USART6_CK	PA2(AF3), PA10(AF6), PB10(AF9), PE2(AF8), PD3(AF8)
USART6_RX	PA1(AF8), PA11(AF6), PB8(AF8), PC11(AF8), PD0(AF8)
USART6_TX	PA0(AF8), PA12(AF6), PB9(AF8), PC10(AF8), PD1(AF8)
USART6_RTS	PA15(AF8), PB14(AF8)
USART6_CTS	PB0(AF8), PB15(AF8)
USART7 function	Optional pins
USART7_CK	PB4(AF14), PB14(AF13), PD4(AF8)
USART7_RX	PB5(AF14) PB12(AF14), PD2(AF8)
USART7_TX	PB6(AF14), PB13(AF14), PC12(AF8)
USART7_RTS	PC8(AF8)
USART7_CTS	PC9(AF8)
USART8 function	Optional pins
USART8_CK	PA14(AF11), PB7(AF10), PE6(AF8), PF10(AF7)
USART8_RX	PA8(AF11), PB3(AF11), PE7(AF7), PF6(AF7)

USART8_TX	PA15(AF11), PB4(AF11), PE8(AF7) PF7(AF7)
USART8_RTS	PE9(AF11), PF8(AF7)
USART8_CTS	PE10(AF11), PF9(AF7)

Table 2-2-10 Debug Pin Functions

Debug pin function	Default pin
SWCLK	PB8
SWDIO/SWIO	PB9

Table 2-2-11 SDIO Pin Functions

SDIO function	Optional pins
SDIO_CK	PB11(AF8), PC1(AF11)
SDIO_CMD	PB10(AF8), PA0(AF9)
SDIO_D0	PE8(AF8), PB14(AF9)
SDIO_D1	PE9(AF8), PB15(AF9s)
SDIO_D2	PE10(AF8), PB3(AF9)
SDIO_D3	PE11(AF8), PB4(AF9)
SDIO_D4	PE12(AF8), PB8(AF10)
SDIO_D5	PE13(AF8), PB9(AF10)
SDIO_D6	PE14(AF8), PC6(AF9)
SDIO_D7	PE15(AF8), PC7(AF9)

Table 2-2-12 SDMMC Pin Functions

SDMMC function	SDMMC_RM=00 Default map pin	SDMMC_RM=01 Remap pin	SDMMC_RM=1x Remap pin
SDMMC_STS/SDMMC_CMD	PD2	PD12	PC10
SDMMC_SDCK/SDMMC_SLVCK	PC12	PD11	PC12
SDMMC_STR	PD3	PD10	PC11
SDMMC_D0	PC8	PB13	PD0
SDMMC_D1	PC9	PC9	PD1
SDMMC_D2	PC10	PB10	PD2
SDMMC_D3	PC11	PB11	PD3
SDMMC_D4	PA14	PA14	PD4
SDMMC_D5	PA15	PA15	PD5
SDMMC_D6	PC6	PC6	PD6
SDMMC_D7	PC7	PC7	PD7

Note 8: When SDMMC is used in 1-wire or 4-wire mode, the GPIO pins corresponding to the unused data lines cannot be used as multiplexed outputs; they can be used as multiplexed inputs or as GPIO outputs.

Table 2-2-13 CAN Pin Functions

CAN1 function	Optional pins
CAN1_RX	PA11(AF9), PB6(AF3), PB8(AF9), PD0(AF9), PA13(AF5)
CAN1_TX	PA12(AF9), PB7(AF3), PB9(AF9), PD1(AF9), PA14(AF5)
CAN2 function	**Optional pins**
CAN2_RX	PB12(AF9), PB5(AF9)
CAN2_TX	PB13(AF9), PB6(AF9)
CAN3 function	**Optional pins**
CAN3_RX	PD12(AF5), PF6(AF2), PF4(AF2), PC4(AF6)
CAN3_TX	PD13(AF5), PF7(AF2), PF3(AF2), PC5(AF6)

Table 2-2-14 FSMC Pin Functions

FSMC function	Optional pins
FSMC_NE1	PD7(AF12)
FSMC_NE2	PF3(AF12)
FSMC_NE3	PF4(AF12)
FSMC_NE4	PE0(AF12)
FSMC_NADV	PB7(AF12), PF14(AF12)
FSMC_NBL0	PC12(AF0)
FSMC_NBL1	PC11(AF0)
FSMC_NBL2	PC10(AF0)
FSMC_NBL3	PA15(AF0)
FSMC_CLK	PD3(AF12)
FSMC_NOE	PD4(AF12)
FSMC_NWE	PD5(AF12)
FSMC_NWAIT	PD6(AF12)
FSMC_NCE2	PF3(AF12)
FSMC_INT2	PF1(AF12)
FSMC_A0	PF5(AF12)
FSMC_A1	PB3(AF12)
FSMC_A2	PB4(AF12)
FSMC_A3	PB8(AF12)
FSMC_A4	PB9(AF12)
FSMC_A5	PC13(AF12), PB6(AF1)
FSMC_A6	PA10(AF10)
FSMC_A7	PA11(AF10)
FSMC_A8	PA12(AF10)
FSMC_A9	PA13(AF10)

FSMC_A10	PB10(AF12)
FSMC_A11	PB11(AF12)
FSMC_A12	PB12(AF12)
FSMC_A13	PB13(AF12)
FSMC_A14	PB14(AF12)
FSMC_A15	PB15(AF12)
FSMC_A16	PD11(AF12)
FSMC_A17	PD12(AF12)
FSMC_A18	PD13(AF12)
FSMC_A19	PE3(AF12), PB10(AF6)
FSMC_A20	PE4(AF12), PB11(AF2)
FSMC_A21	PE5(AF12), PB12(AF3)
FSMC_A22	PE6(AF12), PB13(AF15)
FSMC_A23	PE2(AF12), PB14(AF0)
FSMC_A24	PE1(AF12)
FSMC_A25	PD2(AF11)
FSMC_D0	PD14(AF12)
FSMC_D1	PD15(AF12)
FSMC_D2	PD0(AF12)
FSMC_D3	PD1(AF12)
FSMC_D4	PE7(AF12), PC0(AF4)
FSMC_D5	PE8(AF12), PC1(AF4)
FSMC_D6	PE9(AF12), PC2(AF4)
FSMC_D7	PE10(AF12), PC3(AF4)
FSMC_D8	PE11(AF12), PC6(AF4)
FSMC_D9	PE12(AF12), PC7(AF4)
FSMC_D10	PE13(AF12)
FSMC_D11	PE14(AF12)
FSMC_D12	PE15(AF12)
FSMC_D13	PD8(AF12), PC8(AF4)
FSMC_D14	PD9(AF12), PC9(AF7)
FSMC_D15	PD10(AF12)
FSMC_D16	PC14(AF12), PC3(AF11)
FSMC_D17	PC15(AF12), PB5(AF11)
FSMC_D18	PF6(AF12)
FSMC_D19	PF7(AF12)
FSMC_D20	PF8(AF12)

FSMC_D21	PF9(AF12)
FSMC_D22	PF10(AF12)
FSMC_D23	PA0(AF12)
FSMC_D24	PA1(AF12)
FSMC_D25	PA2(AF12)
FSMC_D26	PA3(AF12)
FSMC_D27	PA4(AF12)
FSMC_D28	PA5(AF12)
FSMC_D29	PB0(AF12)
FSMC_D30	PB1(AF12)
FSMC_D31	PB2(AF12)

Table 2-2-15 SDRAM Pin Functions

SDRAM function	Optional pins
SDRAM_CLK	PF2(AF12), PE2(AF9), PF14(AF1)
SDRAM_CS_N0	PC2(AF12), PC4(AF12), PD6(AF3), PE3(AF9)
SDRAM_CS_N1	PF0(AF4), PB6(AF12), PD7(AF3), PE4(AF9)
SDRAM_CKE0	PC5(AF12), PC3(AF12), PB8(AF3), PF3(AF4), PB8(AF3)
SDRAM_CKE1	PB5(AF12), PC14(AF9), PF4(AF4), PB9(AF3)
SDRAM_RAS_N	PF11(AF12), PC15(AF9), PF3(AF3), PC10(AF1), PE5(AF9)
SDRAM_CAS_N	PF12(AF12), PC0(AF15), PC0(AF15)
SDRAM_WE_N	PC0(AF12), PA7(AF12), PC1(AF15)
SDRAM_DQM0	PC12(AF0), PC2(AF15)
SDRAM_DQM1	PC11(AF0), PE3(AF1), PC3(AF15)
SDRAM_DQM2	PC10(AF0), PA6(AF6), PA0(AF15), PC11(AF1), PE6(AF7)
SDRAM_DQM3	PA15(AF0), PA8(AF6), PB0(AF7)
SDRAM_BA0	PB14(AF12), PB1(AF7)
SDRAM_BA1	PB15(AF12), PE10(AF15), PA13(AF3)
SDRAM_A0	PF5(AF12), PE11(AF15), PA14(AF3)
SDRAM_A1	PB3(AF12), PE12(AF15), PA15(AF12)
SDRAM_A2	PB4(AF12), PE13(AF15)
SDRAM_A3	PB8(AF12), PE0(AF0), PE14(AF15)
SDRAM_A4	PB9(AF12), PE1(AF0), PE15(AF15)
SDRAM_A5	PB6(AF11), PC13(AF12), PB10(AF0)
SDRAM_A6	PA10(AF10), PB11(AF0)
SDRAM_A7	PA11(AF10), PB12(AF0)
SDRAM_A8	PA12(AF10), PB13(AF0)

SDRAM_A9	PA13(AF10), PD9(AF0), PB14(AF0)
SDRAM_A10	PB10(AF12), PD10(AF0)
SDRAM_A11	PB11(AF12), PD11(AF0)
SDRAM_A12	PB12(AF12), PD12(AF0)
SDRAM_D0	PD14(AF12), PD13(AF0)
SDRAM_D1	PD15(AF12), PD14(AF0)
SDRAM_D2	PD0(AF12), PD15(AF0)
SDRAM_D3	PD1(AF12), PF0(AF2)
SDRAM_D4	PE7(AF12), PF1(AF2)
SDRAM_D5	PE8(AF12), PF2(AF2)
SDRAM_D6	PE9(AF12), PC6(AF0)
SDRAM_D7	PE10(AF12), PC7(AF0)
SDRAM_D8	PE11(AF12), PC8(AF0)
SDRAM_D9	PE12(AF12), PC9(AF0)
SDRAM_D10	PE13(AF12), PA9(AF0), PD0(AF1)
SDRAM_D11	PE14(AF12), PA10(AF0), PD1(AF1)
SDRAM_D12	PE15(AF12), PA11(AF0), PD2(AF1)
SDRAM_D13	PD8(AF12), PA12(AF0), PD3(AF1)
SDRAM_D14	PD9(AF12), PA13(AF0), PD4(AF1)
SDRAM_D15	PD10(AF12), PA14(AF0), PD5(AF1)
SDRAM_D16	PC14(AF12), PC3(AF11)
SDRAM_D17	PC15(AF12), PB5(AF11), PE10(AF3)
SDRAM_D18	PF6(AF12), PE11(AF3)
SDRAM_D19	PF7(AF12), PE12(AF3)
SDRAM_D20	PF8(AF12), PA9(AF8)
SDRAM_D21	PF9(AF12), PA10(AF8)
SDRAM_D22	PF10(AF12), PA11(AF8)
SDRAM_D23	PA0(AF12), PA12(AF8)
SDRAM_D24	PA1(AF12), PC10(AF3)
SDRAM_D25	PA2(AF12), PC11(AF3)
SDRAM_D26	PA3(AF12), PC12(AF3)
SDRAM_D27	PA4(AF12), PE5(AF10)
SDRAM_D28	PA5(AF12), PE6(AF10)
SDRAM_D29	PB0(AF12), PF5(AF3)
SDRAM_D30	PB1(AF12), PE0(AF3)
SDRAM_D31	PB2(AF12), PE1(AF3)

Table 2-2-16 UHSIF Pin Functions

UHSIF function	UHSIF_PORT_RM=00 Default map pin	UHSIF_PORT_RM=01 Remap pin	UHSIF_PORT_RM=1x Remap pin
UHSIF_PORT0	PF12	-	PC1
UHSIF_PORT1	PF13	-	PC2
UHSIF_PORT2	PE7	-	PC3
UHSIF_PORT3	PE8	PC1	PB0
UHSIF_PORT4	PE9	PC2	PB1
UHSIF_PORT5	PE10	PC3	PE10
UHSIF_PORT6	PE11	PB0	PE11
UHSIF_PORT7	PE12	PB1	PE12
UHSIF_PORT8	PE13		
UHSIF_PORT9	PE14		
UHSIF_PORT10	PE15		
UHSIF_PORT11	PB10		
UHSIF_PORT12	PB11		
UHSIF_PORT13	PB12		
UHSIF_PORT14	PB13		
UHSIF_PORT15	PB14		
UHSIF_PORT16	PD10		
UHSIF_PORT17	PD11		
UHSIF_PORT18	PD12		
UHSIF_PORT19	PD13		
UHSIF_PORT20	PD14		
UHSIF_PORT21	PD15		
UHSIF_PORT22	PF0		
UHSIF_PORT23	PF1		
UHSIF_PORT24	PF2		
UHSIF_PORT25	PC6		
UHSIF_PORT26	PC7		
UHSIF_PORT27	PC8		
UHSIF_PORT28	PC9		
UHSIF_PORT29	PA13		
UHSIF_PORT30	PA14		
UHSIF_PORT31	PA15		
UHSIF_PORT32	PC10	-	PC10
UHSIF_PORT33	PC11	-	PC11
UHSIF_PORT34	PC12	-	PC12
UHSIF_PORT35	PD0	-	PD0

UHSIF_PORT36	PD1	-	PD1
UHSIF_PORT37	PD2	-	PD2
UHSIF_PORT38	PD3	-	PD3
UHSIF_PORT39	PD4	-	PD4
UHSIF_PORT40	PD5	-	PD5
UHSIF_PORT41	PD6	-	PD6
UHSIF_PORT42	PD7	-	PD7
UHSIF_PORT43	PF3	-	PF3
UHSIF_PORT44	PF4	-	PF4
UHSIF_PORT45	PF5	-	PF5
UHSIF_PORT46	PE0	-	PE0
UHSIF_PORT47	PE1	-	PE1

UHSIF function	UHSIF_CLK_RM =00 Default mapping	UHSIF_CLK_RM= 01 Remapping	UHSIF_CLK_RM =10 Remapping	UHSIF_CLK_RM= 11 Remapping
UHSIF_CLK	PF11	PC0	PF14	PD9

Table 2-2-17 USBPD Pin Functions

USBPD function	Optional pin
CC1	PB3(AF4)
CC2	PB4(AF4)

Table 2-2-18 USBFS Pin Functions

USBFS function	Optional pin
OTG_DP	PA12
OTG_DM	PA11
OTG_VBUS	PA9
OTG_ID	PA10

Table 2-2-19 USBHS Pin Functions

USBHS function	Optional pin
USBHS_DP	PB8
USBHS_DM	PB9

Table 2-2-20 SerDes Pin Functions

SerDes function	Default pin
SERDES_RXP	PE3
SERDES_RXN	PE4
SERDES_TXP	PE5
SERDES_TXN	PE6

Table 2-2-21 OPA Pin Functions

OPA1 function	Optional pins
OPA1_P	PB0/OPA1_P0, PA6/OPA1_P1
OPA1_N	PB1/OPA1_N0, PA7/OPA1_N1
OPA1_OUT	PC4/OPA1_OUT0, PA5/OPA1_OUT1
OPA2 function	**Optional pins**
OPA2_P	PE9/OPA2_P0, PF11/OPA2_P1
OPA2_N	PE8/OPA2_N0, PF12/OPA2_N1
OPA2_OUT	PE7/OPA2_OUT0, PB1/OPA2_OUT1
OPA3 function	**Optional pins**
OPA3_P	PC2/OPA3_P0, PA2/OPA3_P1
OPA3_N	PC3/OPA3_N0, PA3/OPA3_N1
OPA3_OUT	PA0/OPA3_OUT0, PA4/OPA3_OUT1

Table 2-2-22 CMP Pin Functions

CMP function	Optional pins
CMP_P	PB0/CMP_P0, PB2/CMP_P1, OPA1_OUT/CMP_P2
CMP_N	PB1/CMP_N0, PC4/CMP_N1, DAC1_OUT/CMP_N2
CMP function	**Optional pins (MODE[3:0] = 0000b)**
CMP_OUT	PC5(AF13), PE12(AF13), PA6(AF10), PA8(AF12), PB12(AF13), PE6(AF11), PE15(AF13)

Note: Refer to the Operational Amplifier (OPA) and Comparator (CMP) sections of the CH32H417RM manual for more information on bits MODE[3:0].

Table 2-2-23 DVP Pin Functions

DVP function	Optional pins
DVP_HSYNC	PA4(AF13), PB13(AF8)
DVP_VSYNC	PB7(AF13), PF3(AF13), PA5(AF11), PB14(AF15)
DVP_PCLK	PA6(AF13), PF13(AF11), PB12(AF15)
DVP_D0	PC6(AF13), PA9(AF13), PE0(AF11)
DVP_D1	PC7(AF13), PA10(AF13), PE1(AF11)
DVP_D2	PC8(AF13), PE2(AF13), PF4(AF13), PB13(AF13)
DVP_D3	PC9(AF13), PE3(AF13), PF5(AF13)
DVP_D4	PC11(AF13), PE4(AF13), PD12(AF13)
DVP_D5	PB6(AF13), PD3(AF13), PB3(AF13), PF14(AF11), PD13(AF13)
DVP_D6	PB8(AF13), PE5(AF13), PD14(AF13)
DVP_D7	PB9(AF13), PE6(AF13), PD15(AF13)
DVP_D8	PC10(AF13), PF4(AF11)

DVP_D9	PC12(AF13) PF3(AF11)
DVP_D10	PD6(AF13), PB5(AF13)
DVP_D11	PD2(AF13), PF10(AF13), PF0(AF12)

Table 2-2-24 Ethernet Pin Functions

Ethernet function	Optional pins
RGMII_RXC	PA15(AF3)
RGMII_RXDV	PA14(AF12)
RGMII_RD0	PC9(AF12)
RGMII_RD1	PC8(AF12)
RGMII_RD2	PC7(AF12)
RGMII_RD3	PC6(AF12)
RGMII_GTXC	PD15(AF10)
RGMII_TXEN	PD14(AF10)
RGMII_TXD0	PD13(AF10)
RGMII_TXD1	PD12(AF10)
RGMII_TXD2	PD11(AF10)
RGMII_TXD3	PD10(AF10)
ETH_PHY_LED0	PF0(AF10)
ETH_PHY_LED1	PF1(AF10)
ETH_PHY_LED2	PF2(AF10)
ETH_PHY_LED3	PB13(AF10)
ETH_PHY_LED4	PB14(AF10)
ETH_MDC	PC0(AF1)
ETH_MDIO	PC1(AF1)
ETH_PPS	PC2(AF1)

Table 2-2-25 QSPI Pin Functions

QSPI1 function	Optional pins
QSPI1_SCK	PB2(AF9)
QSPI1_SCSN	PB6(AF10)
QSPI1_SIO0	PF8(AF10), PD11(AF9), PC9(AF9)
QSPI1_SIO1	PF9(AF10), PD12(AF9), PC10(AF9)
QSPI1_SIO2	PF7(AF10), PD14(AF9)
QSPI1_SIO3	PF6(AF10), PD13(AF9), PA1(AF9)
QSPI1_SCSXN	PC11(AF9)
QSPI1_SIOX0	PE7(AF10)
QSPI1_SIOX1	PE8(AF10)

QSPI1_SIOX2	PE9(AF10), PF3(AF9)
QSPI1_SIOX3	PE10(AF10), PF5AF9)
QSPI2 function	Optional pins
QSPI2_SCK	PF6(AF4), PE10(AF7), PF0(AF5)
QSPI2_SCSN	PF7(AF4), PE11(AF7), PF1(AF5)
QSPI2_SIO0	PF8(AF4), PE12(AF7), PF2(AF5)
QSPI2_SIO1	PF9(AF4), PE13(AF7)
QSPI2_SIO2	PF10(AF4), PE14(AF7)
QSPI2_SIO3	PC0(AF10), PE15(AF7)
QSPI2_SCSXN	PC1(AF10), PB10(AF11)
QSPI2_SIOX0	PC2(AF10), PB11(AF11)
QSPI2_SIOX1	PC3(AF10), PB12(AF11)
QSPI2_SIOX2	PA0(AF4), PB13(AF11)
QSPI2_SIOX3	PA1(AF4), PB14(AF11)

Table 2-2-26 SWPMI Pin Functions

SWPMI function	Optional pins (Non-1-wire mode)	Optional pins (1-wire mode)
SWP_RX	PC8(AF11), PC10(AF11)	PC6(AF11)
SWP_TX	PC7(AF11)	PC6(AF11)
SWP_SUP	PC9(AF11)	-

Table 2-2-27 SAI Pin Functions

SAI function	Optional pins
SAI_FS_A	PE4(AF6), PC3(AF7)
SAI_SCK_A	PE5(AF6), PC2(AF7)
SAI_SD_A	PE6(AF6), PC1(AF6), PB2(AF6), PD6(AF6)
SAI_MCLK_A	PE2(AF6), PG7PF1(AF6), PC0(AF7)
SAI_FS_B	PF9(AF6), PA15(AF13)
SAI_SCK_B	PF8(AF6), PA14(AF13)
SAI_SD_B	PF6(AF6), PE3(AF6), PA13(AF13)
SAI_MCLK_B	PF7(AF6), PC9(AF15)

Table 2-2-28 LTDC Pin Functions

LTDC function	Optional pins
LTDC_CLK	PF1(AF14), PB14(AF14), PE14(AF14), PA15(AF15)
LTDC_HSYNC	PC6(AF14), PC10(AF15), PA6(AF11)
LTDC_VSYNC	PA7(AF14), PA4(AF14), PC11(AF15), PB12(AF10)

LTDC_DE	PC5(AF14), PE13(AF14), PF10(AF14), PC12(AF15)
LTDC_R0	PE1(AF14), PA0(AF14), PA14(AF15)
LTDC_R1	PF0(AF11), PA2(AF14)
LTDC_R2	PD13(AF3), PA1(AF14), PC10(AF14)
LTDC_R3	PD12(AF11), PA15(AF9), PB0(AF9), PD0(AF15)
LTDC_R4	PD11(AF11), PA5(AF14), PA11(AF14), PD1(AF15)
LTDC_R5	PA9(AF14), PC0(AF14), PA12(AF14), PD2(AF15)
LTDC_R6	PA8(AF14), PC12(AF14), PB1(AF9), PE2(AF14), PD3(AF15)
LTDC_R7	PC4(AF14), PF0(AF14), PE15(AF14), PD4(AF15)
LTDC_G0	PE5(AF14), PB1(AF14), PB14(AF6)
LTDC_G1	PE6(AF14), PB0(AF14)
LTDC_G2	PA6(AF14), PC0(AF11), PD5(AF15), PD15(AF7)
LTDC_G3	PC9(AF10), PF4(AF9), PE11(AF14), PD6(AF15)
LTDC_G4	PC8(AF14), PB10(AF14), PD7(AF15)
LTDC_G5	PC1(AF14), PB11(AF14), PF3(AF15)
LTDC_G6	PC7(AF14), PF4(AF15)
LTDC_G7	PD3(AF14), PB15(AF14), PF2(AF14), PF5(AF15)
LTDC_B0	PE4(AF14), PF3(AF14), PF1(AF8)
LTDC_B1	PE0(AF14), PA10(AF14), PC10(AF10), PD0(AF14), PD14(AF8)
LTDC_B2	PD6(AF14), PA3(AF9), PC9(AF14) PD2(AF14), PF4(AF14), PA13(AF8)
LTDC_B3	PD7(AF14), PA8(AF13), PD10(AF14), PF5(AF14), PE0(AF15)
LTDC_B4	PD4(AF14), PA10(AF12), PC11(AF14), PE12(AF14), PE0(AF9), PE1(AF15)
LTDC_B5	PD5(AF14), PA3(AF14), PB5(AF3), PF14(AF15)
LTDC_B6	PA14(AF14), PA15(AF14), PB8(AF14)
LTDC_B7	PD2(AF9), PD8(AF14), PB9(AF14)

Table 2-2-29 DFSDM Pin Functions

DFSDM function	Optional pins
DFSDM_DATIN0	PC1(AF3)
DFSDM_CKIN0	PC0(AF3)
DFSDM_DATIN1	PC3(AF3), PB1(AF6), PD6(AF4), PB12(AF6)
DFSDM_CKIN1	PC2(AF3), PB2(AF4), PD7(AF6), PB13(AF6)
DFSDM_CKOUT	PE9(AF3), PB0(AF6), PC2(AF6), PD10(AF3), PD3(AF3)

Table 2-2-30 MCO Pin Functions

MCO function	Optional pins
MCO	PB0(AF0)

Table 2-2-31 PIOC Pin Functions

PIOC function	Optional pins
PIOC_IO0	PE3(AF5), PB8(AF5), PF12(AF3), PC1(AF7), PA0(AF5)
PIOC_IO1	PE4(AF4), PB9(AF7), PF13(AF5), PC2(AF8), PF14(AF5), PC0(AF5)

Chapter 3 Electrical Characteristics

3.1 Test Conditions

All voltages are referenced to V_{SS} unless otherwise noted and labeled.

All minimum and maximum values will be guaranteed under worst case ambient temperature, supply voltage and clock frequency conditions.

CH32H417 typical values are based on a room temperature of 25°C, supplying V_{DD33} = V_{DD33A} = 3.3V, V_{DDIO} = 3.3V, generating V_{IO18} = 1.8V or 3.3V, V_{DD12A} = 1.2V, and V_{DDK} = 1.2V for design guidance.

CH32H416 typical values are based on an environment used for design guidance at room temperature 25°C, supply V_{DD33} = V_{DD33A} = 3.3V, producing V_{DD12A} = 1.2V, V_{DDK} = 1.2V.

CH32H415 typical values are based on a room temperature of 25°C, supply V_{DD33} = V_{DD33A} = 3.3V, and generate V_{DDK} = 1.2V for design guidance.

For data obtained through comprehensive evaluation, design simulation or process characterization, no testing is performed on the production line. Minimum and maximum values are statistically obtained after sample testing on the basis of a comprehensive evaluation. Characterization parameters are guaranteed by comprehensive evaluation or design unless specifically stated as measured values.

Power supply scheme:

Figure 3-1-1 CH32H417 Conventional power supply typical circuit

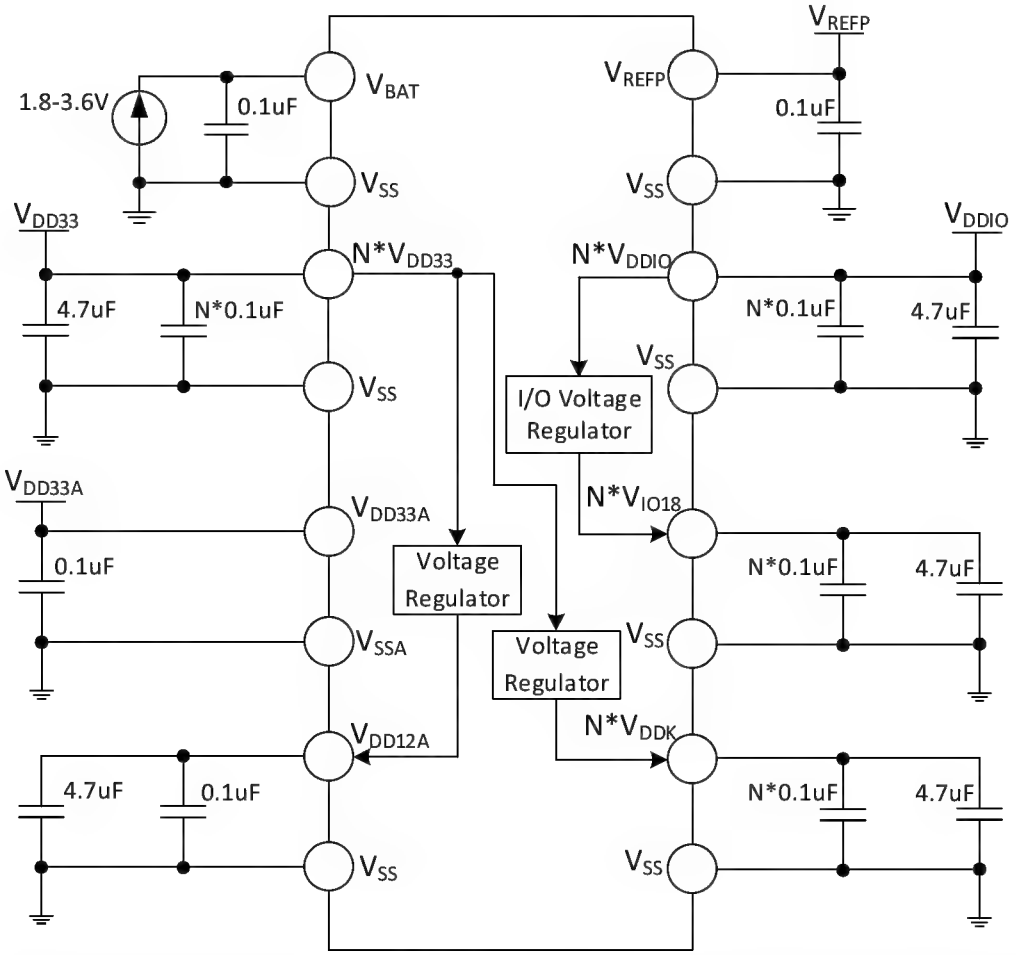

Note: For CH32H417 chip, V_{DD33}, V_{DDIO}, V_{IO18} and V_{DDK} may have N (N>1) pins in some chip packages, and the power supply pins with the same name must be shorted.

The main V_{DD33} pin (adjacent to the Ethernet signal pin) is connected to an external 0.1uF shunt decoupling capacitor of 4.7uF capacity, and the remaining V_{DD33} pins are connected to an external decoupling capacitor of 0.1uF capacity only.

The main V_{DDIO} pin (adjacent to V_{IO18}) is connected with 0.1uF external decoupling capacitor in parallel with 4.7uF capacity, and the remaining V_{DDIO} pins only need to be connected with 0.1uF external decoupling capacitor.

The main V_{IO18} pin (adjacent to V_{DDIO}) is connected to a 0.1uF shunt 4.7uF capacity decoupling capacitor externally, and the remaining V_{IO18} pins only need to be connected to a 0.1uF capacity decoupling capacitor externally.

The main V_{DDK} pin (adjacent to V_{DD33}) is connected with a 0.1uF shunt decoupling capacitor of 4.7uF capacity, and the remaining V_{DDK} pins are connected with an external decoupling capacitor of 0.1uF capacity only.

Figure 3-1-2 CH32H416 Conventional power supply typical circuit

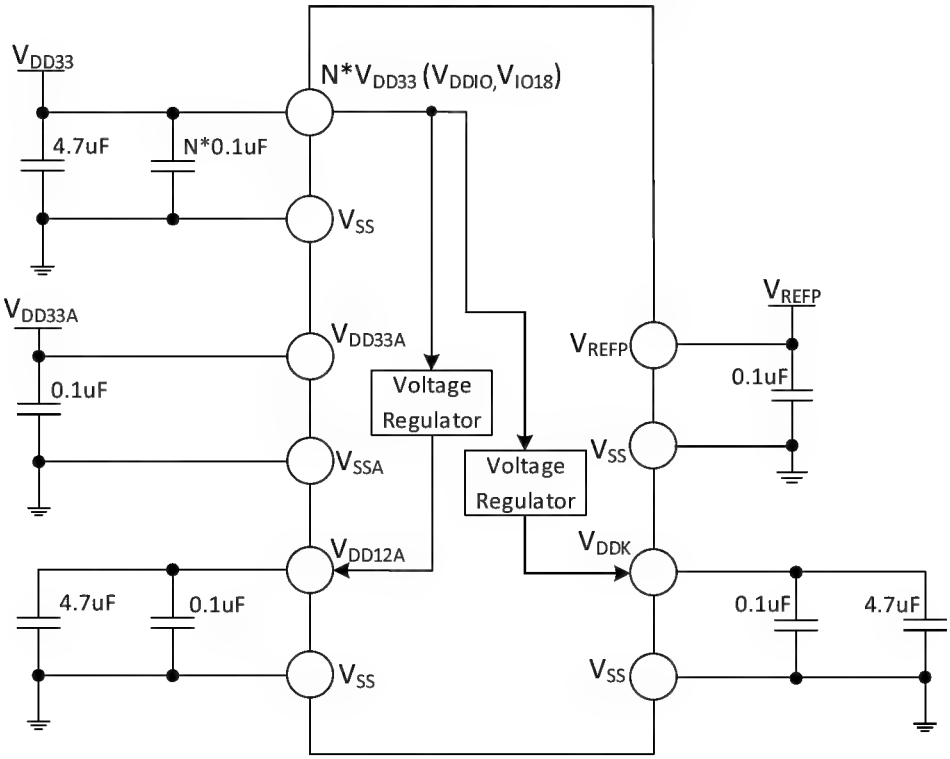

Note: For the CH32H416RDU6 chip, V_{DD33} has 2 pins, and the power supply pin of the same name must be shorted.

The main V_{DD33} pin (adjacent to the V_{DDK} pin) is connected externally to a 0.1uF shunt decoupling capacitor of 4.7uF capacity, and the remaining V_{DD33} pins are only connected externally to a 0.1uF capacity decoupling capacitor.

Figure 3-1-3 CH32H415 Conventional power supply typical circuit

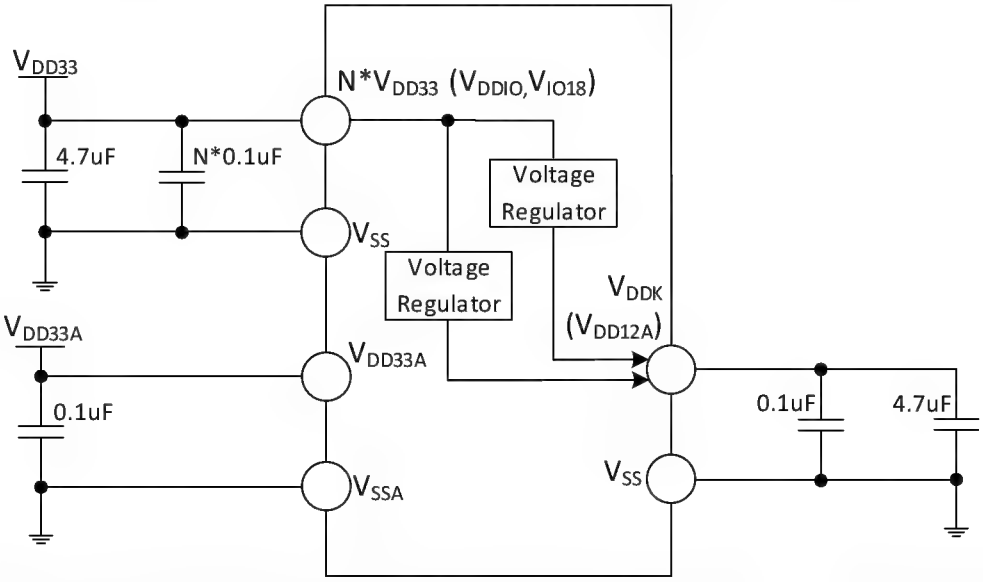

Note: For the CH32H415REU6 chip, VDD33 has 2 pins, and the power supply pin of the same name must be shorted.

The main VDD33 pin (adjacent to the VDDK pin) is connected externally to a 0.1uF shunt decoupling capacitor

of 4.7uF capacity, and the remaining VDD33 pins are only connected externally to a 0.1uF capacity decoupling capacitor.

3.2 Absolute Maximum Ratings

Critical or exceeding the absolute maximum value may cause the chip to operate improperly or even be damaged.

Table 3-1 Absolute maximum ratings

Symbol	Description	Min.	Max.	Unit
T_A	Ambient temperature during operation	-40	85	℃
T_S	Ambient temperature during storage	-40	125	℃
V_{DD33}	External mains supply voltage (including V_{DD33A} and V_{DD33})	-0.3	4.0	V
V_{DDIO}	Power supply voltage of some conventional I/O pins	-0.3	4.0	V
V_{IO18}	Power supply voltage of some high-speed I/O pins	-0.3	4.0	V
V_{DD12A}	USB 3.0 module power supply voltage	-0.3	1.5	V
V_{DDK}	Power supply decoupling terminal of core circuit	-0.3	1.5	V
V_{REFP}	Positive reference voltage of ADC, HSADC and DAC modules	-0.3	V_{DD33A}+0.3	V
V_{IN}	Input voltage on FT (tolerant 5V) pin.	-0.3	5.5	V
	Input voltage on USB 2.0 and Ethernet PHY pins	-0.3	V_{DD33}+0.3	V
	Input voltage on some high-speed I/O pins (powered by VIO18)	-0.3	V_{IO18}+0.3	V
	Input voltage on USB 3.0 pin	-0.3	V_{DD12A}+0.3	V
	Input voltage on other pins (supplied by V_{DDIO})	-0.3	V_{DDIO}+0.3	V
$\|\Delta V_{DD33_x}\|$	Voltage difference between each V_{DD33} of the main power supply pin		20	mV
$\|\Delta V_{DDIO_x}\|$	Voltage difference between different V_{DDIO} supply pins		20	mV
$\|\Delta V_{IO18_x}\|$	Voltage difference between different V_{IO18} supply pins		20	mV
$\|\Delta V_{SS_x}\|$	Voltage difference between each V_{SS} of the common ground pin		20	mV
$V_{ESDIO(HBM)}$	ESD electrostatic discharge voltage (HBM) for Common I/O Pins	4K		V
I_{VDD33}	Total current of all V_{DD33}/V_{DD33A} main supply pins		400	mA
I_{VIO}	Total current of all V_{DDIO}/V_{IO18} supply pins		200	mA
I_{VSS}	Total current of all V_{SS} common ground pins		600	mA
I_{IO}	Sink current on arbitrary I/O and control pins		25	mA
	Source current on arbitrary I/O and control pins		-25	

3.3 Electrical Characteristics

3.3.1 Operating Conditions

Table 3-2 General operating conditions

Symbol	Parameter	Condition	Min.	Typ.	Max.	Unit
F_{CORE1}	Core RISC-V5F frequency	LDO_VDDK = 011 (Default)			400(4)	MHz

		LDO_VDDK = 101			480(5)	MHz
F_{HCLK} Or F_{CORE0}	Internal system bus frequency or core RISC-V3F frequency	LDO_VDDK = 011 (Default)			150	MHz
		LDO_VDDK = 101			180(5)	MHz
V_{DD33}	Standard working voltage	USB or ETH not used	2.4	3.3	3.6	V
		Use USB or ETH or SerDes	3.2	3.3	3.45	V
V_{DD33A}	Analog part working voltage	ADCs, HSADCs and DACs not used, V_{DD33A} cannot be lower than V_{DDIO}	1.8	3.3	3.6	V
		Use the ADC, V_{DD33A} cannot be lower than V_{DDIO} and V_{REFP} cannot be higher than V_{DD33A}	2.4	3.3	3.6	V
		Use the HSADC, V_{DD33A} cannot be lower than V_{DDIO} and V_{REFP} cannot be higher than V_{DD33A}	3.0	3.3	3.6	V
		Use OPA, OPA output cannot be higher than V_{DDIO}	1.8	3.3	3.6	V
		Use DAC, DAC output cannot be higher than V_{DDIO}	2.4	3.3	3.6	V
V_{DD12A}(1)	Working voltage of USB 3.0 module		1.18	1.2	1.28	V
V_{DDK}(1)	Core operating voltage		1.17	1.2	1.27	V
V_{DDIO}	Working voltage of some conventional I/O pins	V_{DDIO} cannot be higher than V_{DD33}	1.8	3.3	3.6	V
V_{IO18}	Working voltage of some high-speed I/O pins	V_{IO18} cannot be higher than V_{DDIO}	1.1		3.6	V
R_{HSEXO_ext}	Pull-down resistor externally connected to XO pin (used to configure the default output voltage of V_{IO18} during initial power-up)	V_{IO18} default output 2.5V	220	300	400	kΩ
		V_{IO18} default output 1.8V	1200	Floating		kΩ
		V_{IO18} default output 1.2V	60	82	110	kΩ
V_{BAT}	Working voltage of backup unit	V_{BAT} cannot be higher than V_{DD33}	1.8		3.6	V
V_{REFP}(2)	Positive reference voltage of ADC, HSADC and DAC modules	V_{REFP} cannot be higher than V_{DD33A}	2.4	3.3	3.6	V
T_A	Ambient temperature at work		-40		85	°C
T_J	Junction temperature		-40		105	°C

Note:

1. V_{DD12A} and V_{DDK} current is large, consider the PCB alignment voltage drop loss, if the external power supply is recommended 1.2V plus 20 to 60mV.

2. V_{REFP} external capacitance to be as close as possible, otherwise affect the ADC performance.

3. For CH32V417 chip, voltage relationship: $V_{DD33} \geq V_{DD33A} \geq V_{DDIO} \geq V_{IO18}$; and $V_{DD33A} \geq V_{REFP}$.
For CH32V416 chip, voltage relationship: $V_{DD33} = V_{DD33A}$; and $V_{DD33A} \geq V_{REFP}$.

For CH32V415 chip, voltage relationship: $V_{DD33} = V_{DD33A}$.

4. Measured at room temperature is not less than 480MHz. Temperature and process fluctuations are not taken into account, and 480MHz is prohibited to be used in official projects.

5. Only for commercial grade application: $T_A \leq 70°C$ and good heat dissipation.

Table 3-3 Power-on and power-down conditions

Symbol	Parameter	Condition	Min.	Max.	Unit
t_{VDD33}	V_{DD33} rising rate		0	∞	us/V
	V_{DD33} falling rate		20	∞	us/V

3.3.2 Built-in Reset and Power Control Block Characteristics

Table 3-4 Reset and voltage monitor

Symbol	Parameter	Condition	Min.	Typ.	Max.	Unit
V_{PVD} (1)	Level selection of programmable voltage detector(2)	PLS[2:0] = 000 (Rising edge)		2.54		V
		PLS[2:0] = 000 (Falling edge)		2.44		V
		PLS[2:0] = 001 (Rising edge)		2.60		V
		PLS[2:0] = 001 (Falling edge)		2.49		V
		PLS[2:0] = 010 (Rising edge)		2.70		V
		PLS[2:0] = 010 (Falling edge)		2.59		V
		PLS[2:0] = 011 (Rising edge)		2.80		V
		PLS[2:0] = 011 (Falling edge)		2.69		V
		PLS[2:0] = 100 (Rising edge)		2.90		V
		PLS[2:0] = 100 (Falling edge)		2.79		V
		PLS[2:0] = 101 (Rising edge)		3.00		V
		PLS[2:0] = 101 (Falling edge)		2.89		V
		PLS[2:0] = 110 (Rising edge)		3.10		V
		PLS[2:0] = 110 (Falling edge)		2.99		V
		PLS[2:0] = 111 (Rising edge)		3.20		V
		PLS[2:0] = 111 (Falling edge)		3.09		V
$V_{PVDhyst}$	PVD hysteresis			0.11		V
$V_{POR/PDR}$	Power-on/power-down reset threshold	Rising edge		2.35		V
		Falling edge		2.33		V
$V_{PDRhyst}$	PDR hysteresis			20		mV

Note: 1. Normal temperature test value.

3.3.3 Embedded Reference Voltage

Table 3-5 Embedded reference voltage

Symbol	Parameter	Condition	Min.	Typ.	Max.	Unit
V_{REFINT}	Built-in reference voltage	T_A = -40°C ~ 85°C	1.17	1.21	1.24	V

3.3.4 Supply Current Characteristics

Current consumption is a comprehensive index of a variety of parameters and factors. These parameters and factors include operating voltage, ambient temperature, I/O pin load, software configuration of the product, the operating frequency, flip rate of the I/O pin, the location of the program in memory and the executed code, etc. The current consumption measurement method is as follows:

Figure 3-2-1 CH32H417 Current consumption measurement

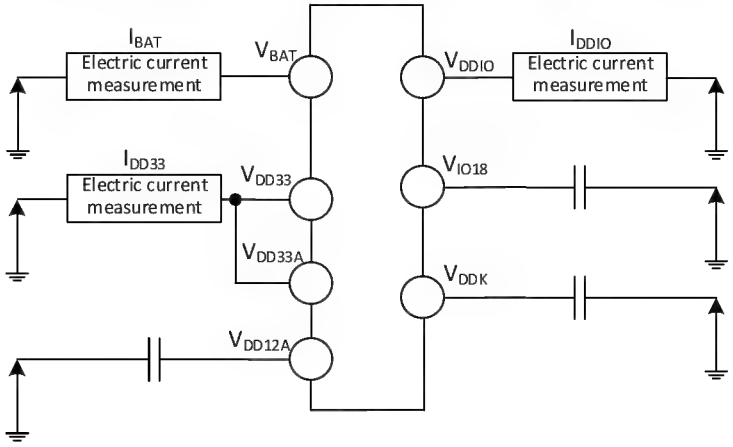

Figure 3-2-2 CH32H416 Current consumption measurement

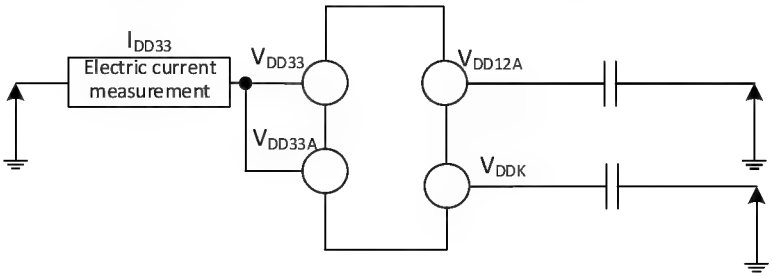

Figure 3-2-3 CH32H415 Current consumption measurement

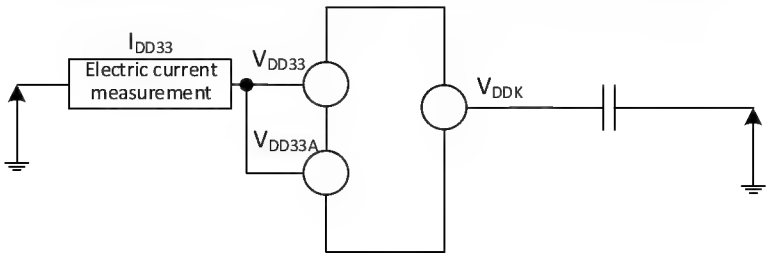

The CH32H417 is at the following conditions:

Tested at room temperature $V_{DD33} = V_{DD33A} = 3.3V$, $V_{DDIO} = 3.3V$, VIO18 = 1.8V: All I/O ports configured with pull-down inputs, HSI = 25MHz (calibrated), and $F_{HCLK} = F_{V3F}$. Enable or disable all peripheral clocks for power consumption.

The CH32H416 is in the following conditions:

Tested at room temperature $V_{DD33} = V_{DD33A} = 3.3V$: All I/O ports configured with pull-down inputs, HSI = 25MHz (calibrated), and $F_{HCLK} = F_{V3F}$. Enable or disable all peripheral clocks for power consumption.

The CH32H415 is in the following conditions:
Tested at room temperature $V_{DD33} = V_{DD33A} = 3.3V$: All I/O ports configured with pull-down inputs, HSI = 25MHz (calibrated), $F_{HCLK} = F_{V3F}$. Enable or disable all peripheral clocks for power consumption.

Note: The pins that are not encapsulated out of the small package model or the pins that have been encapsulated out but not used, it is recommended to configure them as pull-up inputs or pull-down inputs, or else the current index may be affected, please refer to the EVT low-power routines for specific operations.

Table 3-6-1 Typical current consumption in run mode with data processing code running from SRAM (RISC-V5F)

Symbol	Parameter	Condition			Typ.		Unit
		Clock	F_{V5F}	F_{HCLK}	Enable all peripherals	Disable all peripherals	
I_{DD}(1)	Supply current in Run mode	Run in high-speed internal RC oscillator (HSI), HB prescaler is used to reduce the frequency.	480MHz	120MHz	135.5	101.1	mA
			400MHz	100MHz	101.6	73.6	
			384MHz	96MHz	96.6	68.7	
			288MHz	144MHz	95.4	57.4	
			25MHz	25MHz	14.0	8.3	
			500kHz	500kHz	10.0	8.2	
		External clock	480MHz	120MHz	136.7	101.9	
			400MHz	100MHz	102.2	74.2	
			384MHz	96MHz	97.4	69.6	
			288MHz	144MHz	96.0	58.0	
			25MHz	25MHz	14.7	8.9	
			500kHz	500kHz	10.7	8.8	

Note: The above are measured parameters.

Table 3-6-2 Typical current consumption in run mode with data processing code running from SRAM (RISC-V3F)

Symbol	Parameter	Condition			Typ.		Unit
		Clock	F_{V3F}	F_{HCLK}	Enable all peripherals	Disable all peripherals	
I_{DD}(1)	Supply current in Run mode	Run in high-speed internal RC oscillator (HSI), HB prescaler is used to reduce the frequency.	144MHz	144MHz	77.1	33.2	mA
			96MHz	96MHz	59.2	33.2	
			25MHz	25MHz	15.4	8.6	
			500kHz	500kHz	9.9	8.4	
		External clock	144MHz	144MHz	77.5	33.7	
			96MHz	96MHz	60.0	33.7	
			25MHz	25MHz	14.4	9.7	
			500kHz	500kHz	10.7	8.6	

Note: The above are measured parameters.

Table 3-6-3 Typical current consumption in run mode with data processing code running from SRAM (RISC-V5F + RISC-V3F)

Symbol	Parameter	Condition			Typ.		Unit
		Clock	F_{V5F}	F_{V3F}	Enable all peripherals	Disable all peripherals	
I_{DD} (1)	Supply current in Run mode	Run in high-speed internal RC oscillator (HSI), HB prescaler is used to reduce the frequency.	480MHz	120MHz	143.4	110.8	mA
			400MHz	100MHz	115.5	87.8	
			384MHz	96MHz	106.6	78.8	
			288MHz	144MHz	124.2	86.5	
			25MHz	25MHz	16.9	10.9	
			500kHz	500kHz	10.0	8.8	
		External clock	480MHz	120MHz	144.0	111.2	
			400MHz	100MHz	115.9	88.3	
			384MHz	96MHz	107.5	79.6	
			288MHz	144MHz	125.5	87.9	
			25MHz	25MHz	17.6	11.7	
			500kHz	500kHz	10.8	9.2	

Note: The above are measured parameters.

Table 3-7 Typical current consumption in sleep mode with data processing code running from SRAM (RISC-V5F + RISC-V3F)

Symbol	Parameter	Condition			Typ.		Unit
		Clock	F_{V5F}	F_{V3F}	Enable all peripherals	Disable all peripherals	
I_{DD}(1)	Supply current in sleep mode (when peripherals are powered and clock is held)	Run on a high-speed internal RC oscillator (HSI) using HB prescaling for frequency reduction	480MHz	120MHz	60.1	25.7	mA
			400MHz	100MHz	45.7	18.2	
			384MHz	96MHz	48.0	22.2	
			288MHz	144MHz	58.8	22.8	
			25MHz	25MHz	10.6	5.2	
			500kHz	500kHz	9.9	5.2	
		External clock	480MHz	120MHz	60.8	26.4	
			400MHz	100MHz	46.3	19.0	
			384MHz	96MHz	48.8	22.8	
			288MHz	144MHz	60.1	23.5	
			25MHz	25MHz	11.4	6.0	
			500kHz	500kHz	10.6	5.9	

Note: The above are measured parameters.

Table 3-8 Typical current consumption in stop mode (RISC-V5F + RISC-V3F)

Symbol	Parameter	Condition	Typ.	Unit

I_{DD}	Supply current in stop mode	The voltage regulator is in the running mode, and the low-speed and high-speed internal RC oscillators and external oscillators are in the off state (no independent watchdog).	2.41	mA
		The voltage regulator is in the low power consumption mode, the low-speed and high-speed internal RC oscillators and external oscillators are in the off state (PVD is off without independent watchdog), and the RAM enters the low power consumption mode.	1.38	mA
I_{DD_VBAT}	Supply current for backup area (Remove V_{DD33}, V_{DD33A}, and V_{DDIO} and use only V_{BAT} supply)	Low-speed external oscillator and RTC are turned on.	3.5	uA

Note: The above are measured parameters.

3.3.5 External Clock Source Characteristics

Table 3-9 From external high-speed clock

Symbol	Parameter	Condition	Min.	Typ.	Max.	Unit
F_{HSE_ext}	External clock frequency		5	25	32	MHz
V_{HSEH}(1)	XI input pin high voltage		0.8*V_{DDIO}		V_{DDIO}	V
V_{HSEL}(1)	XI input pin low voltage		0		0.2*V_{DDIO}	V
$C_{in(HSE)}$	XI input capacitance			5		pF
$DuCy_{(HSE)}$	Duty cycle			50		%
I_L	XI input leakage current				±1	uA

Note 1: Failure to meet this condition may cause a level recognition error.

Figure 3-3 High frequency clock circuit for external clock source

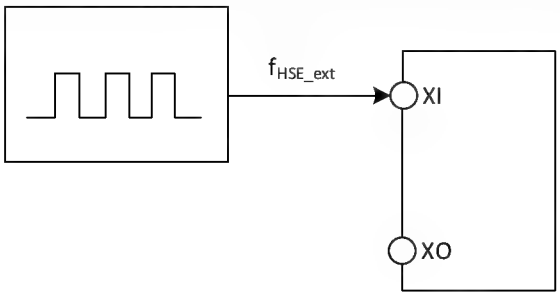

Table 3-10 From external low-speed clock

Symbol	Parameter	Condition	Min.	Typ.	Max.	Unit
F_{LSE_ext}	User external clock frequency			32.768		kHz

V_{LSEH}	OSC32_IN input pin high level voltage		$0.8*V_{DD33}$		V_{DD33}	V
V_{LSEL}	OSC32_IN input pin low voltage		0		$0.2*V_{DD33}$	V
$C_{in\ (LSE)}$	OSC32_IN input capacitance			5		pF
$DuCy_{LSE}$	Duty Cycle			50		%
I_L	OSC32_IN input leakage current				±1	uA

Note 1: Failure to meet this condition may cause a level recognition error.

Figure 3-4 Low frequency clock circuit for external clock source

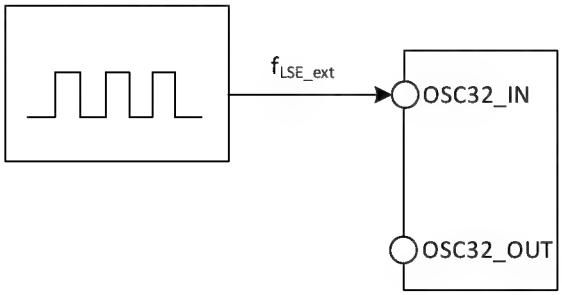

Table 3-11 High-Speed external clocks generated using one crystal/ceramic resonator

Symbol	Parameter	Condition	Min.	Typ.	Max.	Unit
F_{XI}	Resonator frequency		5	25	32	MHz
R_F	Feedback resistance (No need for external)			250		kΩ
C_{LOAD}	Suggested load capacitance with corresponding crystal serial impedance R_S	$R_S = 60\Omega$(1)		20		pF
I_{HSE}	HSE drive current	20p load		0.8		mA
g_m	Oscillator transconductance	Startup		26		mA/V
$t_{SU(HSE)}$	Startup time	V_{DD33} stabilization, 25M crystal		1.5(2)		ms

Note: 1. 25M crystal ESR is recommended not to exceed 60Ω, below 25M can be relaxed appropriately.

2. Start-up time refers to the time difference from when HSEON is turned on to when HSERDY is set.

3. 3. When using Ethernet, the crystal oscillator must be 25MHz.

Circuit reference design and requirements:

The load capacitance of the crystal is based on the crystal manufacturer's recommendation, usually $C_{L1}=C_{L2}$.

Figure 3-5 Typical circuit for external 25M crystal

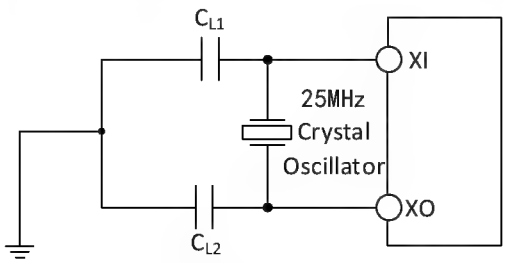

Table 3-12 Low-speed external clocks generated using a crystal/ceramic resonator (f_{LSE}=32.768KHz)

Symbol	Parameter	Condition	Min.	Typ.	Max.	Unit
F_{LSE}	Resonator frequency			32.768		kHz
R_F	Feedback resistance			5		MΩ
C	Suggested load capacitance with corresponding crystal serial impedance R_S	R_S < 70kΩ			15	pF
i_2	LSE drive current			0.35		uA
g_m	Oscillator transconductance	Startup		30		uA/V
$t_{SU\ (LSE)}$	Startup time	V_{DD33} stabilization		800		mS

Circuit reference design and requirements:

The load capacitance of the crystal is based on the crystal manufacturer's recommendation, usually C_{L1}=C_{L2}, optional about 12pF.

Figure 3-6 Typical Circuit for External 32.768K Crystal

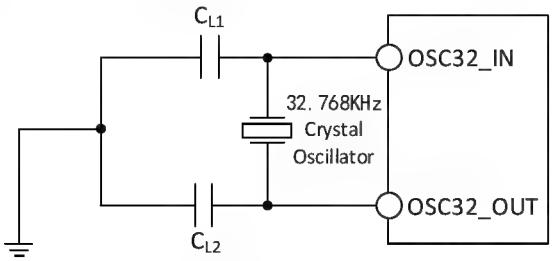

Note: The load capacitance C_L is calculated by the following formula: $C_L = C_{L1} \times C_{L2} / (C_{L1} + C_{L2}) + C_{stray}$, where C_{stray} is the capacitance of the pins and the capacitance associated with the PCB board or PCB, and its typical value is between 2pF and 7pF.

3.3.6 Internal Clock Source Characteristics

Table 3-13 Internal High-Speed (HSI) RC Oscillator Characteristics

Symbol	Parameter	Condition	Min.	Typ.	Max.	Unit
F_{HSI}	Frequency (after calibration)			25		MHz
$DuCy_{HSI}$	Duty cycle		45	50	55	%
ACC_{HSI}	Accuracy of HSI oscillator (after calibration)	T_A = 0°C~70°C	-1.6		1.6	%
		T_A = -40°C~85°C	-2.2		2.2	%
$t_{SU(HSI)}$	HSI oscillator startup stabilization time			10		us

Table 3-14 Internal Low-Speed (LSI) RC Oscillator Characteristics

Symbol	Parameter	Condition	Min.	Typ.	Max.	Unit
F_{LSI}	Frequency		25	40	60	kHz
$DuCy_{LSI}$	Duty Cycle		45	50	55	%
$t_{SU(LSI)}$(1)	LSI oscillator startup stabilization time			230		us

$I_{DD(LSI)}$	LSI oscillator power consumption			0.6		uA

Note: 1. Register RCC_CTLR LSION is set to 1. Wait for LSIRDY to be set to 1.

3.3.7 PLL Characteristics

Table 3-15 PLL Characteristics

Symbol	Parameter	Condition	Min.	Typ.	Max.	Unit
F_{PLL_IN}	PLL input clock		5	25	32	MHz
	PLL input clock duty cycle		40		60	%
F_{PLL_OUT}	PLL multiplier output clock		100		600	MHz
t_{LOCK}	PLL lock time			40	90	us

3.3.8 Wakeup Time from Low-power Mode

Table 3-16 Wakeup time from low-power mode

Symbol	Parameter	Condition	Typ.	Unit
$t_{wusleep}$	Wakeup from Sleep mode	Use HSI RC clock wakeup	0.3	us
t_{wustop}	Wakeup from Stop mode (Regulator in running mode)	HSI RC clock wakeup	4	us
	Wakeup from Standby mode (Regulator in low-power mode)	Regulator wake-up time from low-power mode + HSI RC clock wake-up	35	us

Note: The above are measured parameters.

3.3.9 Memory Characteristics

Table 3-17 Flash memory characteristics

Symbol	Parameter	Condition	Min.	Typ.	Max.	Unit
t_{prog_page}	Page (256 bytes) programming time			1.5	3	ms
t_{erase_sec}	Sector erase time	DBMODE = 0, single 4K bytes		3	10	ms
		DBMODE = 1, single 8K bytes				
t_{erase_32k}	Block erase time	DBMODE = 0, single 32K bytes		3	10	ms
		DBMODE = 1, single 64K bytes				

Table 3-18 Flash memory endurance and data retention

Symbol	Parameter	Condition	Min.	Typ.	Max.	Unit
N_{END}	Endurance	T_A = 25°C	50K			Times
t_{RET}	Data retention period		20			Years

3.3.10 I/O Port Characteristics

Table 3-19 General-purpose I/O static characteristics

Symbol	Parameter	Condition	Min.	Typ.	Max.	Unit
V_{IH}	Standard I/O pin, input high voltage	V*_IO_HSLV = 0	0.45*V*+		V*+0.3	V

			0.41			
		V*_IO_HSLV = 0, and V* = 3.3V	1.9		3.6	V
		V*_IO_HSLV = 1, exclude PC13~PC15	0.7*V*		V*+0.3	V
	FT I/O pin, input high voltage	V*_IO_HSLV = 0	0.45*V*+ 0.41		5.5	V
		V*_IO_HSLV = 0, And V* = 3.3V	1.9		5.5	V
		V*_IO_HSLV = 1	0.7*V*		5.5	V
V_{IL}	Standard I/O pin, input low level voltage	V*_IO_HSLV = 0	-0.3		0.29*V*- 0.07	V
		V*_IO_HSLV = 0, and V* = 3.3V	-0.3		0.9	V
		V*_IO_HSLV = 1, exclude PC13~PC15	-0.3		0.3*V*	V
	FT I/O pin, input low level voltage	V*_IO_HSLV = 0	-0.3		0.29*V*- 0.07	V
		V*_IO_HSLV = 0, and V* = 3.3V	-0.3		0.9	V
		V*_IO_HSLV = 1	-0.3		0.3*V*	V
V_{hys}	Standard I/O pin Schmitt trigger voltage hysteresis			240		mV
	FT I/O Schmitt trigger voltage hysteresis			220		mV
I_{lkg}	Input leakage current	Standard I/O port			1	uA
		FT I/O port			3	uA
R_{PU}	Pull up equivalent resistance		30	40	55	kΩ
R_{PD}	Pull down equivalent resistance		30	40	55	kΩ
C_{IO}	I/O pin capacitance			5		pF

Note: For the CH32H417 chip, the I/O pins are powered by V_{DDIO}, V_{IO18}, V_{DD33}, or V_{BAT}; V in the above table can be denoted as V_{DDIO}, V_{IO18}, V_{DD33}, or V_{BAT} according to the specific pin; the bit V*_IO_HSLV in the above table can be denoted as VDD33_IO_HSLV, VDDO_ IO_HSLV or VIO18_IO_HSLV.*

Output Drive Current Characteristics

The GPIOs (General-purpose Input/Output Ports) can absorb or output up to ±8mA of current and absorb or output ±20mA of current (not strictly up to V_{OL}/V_{OH}). In user applications, the total current driven by all IO pins must not exceed the absolute maximum ratings given in section 3.2:

Table 3-20-1 Output voltage characteristics (excluding FT I/O pin and PC13~PC15 pin)

Symbol	Parameter	Condition	Min.	Max.	Unit
V_{OL}	Output low level, 8 pins sink current	I_{IO} = 8mA		0.25	V

V_{OH}	Output high level, 8 pins output current.	2.7V≤V*≤3.6V,V*_IO_HSLV=0 1.6V≤V*≤2.7V,V*_IO_HSLV=1	V*-0.25		
V_{OL}	Output low level, 8 pins sink current	I_{IO} = 20mA 2.7V≤V*≤3.6V,V*_IO_HSLV=0		0.6	V
V_{OH}	Output high level, 8 pins output current.		V*-0.6		
V_{OL}	Output low level, 8 pins sink current	I_{IO} = 8mA 1.6V≤V*≤2.7V,V*_IO_HSLV=0		0.4	V
V_{OH}	Output high level, 8 pins output current.		V*-0.4		

Note: 1. If multiple I/O pins are driven at the same time in the above conditions, the sum of the currents must not exceed the absolute maximum ratings given in section 3.2 of the table. In addition, when multiple I/O pins are driven at the same time, the current at the power/ground point is high, which can lead to a voltage drop so that the voltage of the internal I/O does not reach the power supply voltage in the table, thus causing the drive current to be less than the nominal value.

2. V in the above table can be expressed as V_{DDIO}, V_{IO18} or V_{DD33} according to specific pins; bit V*_IO_HSLV in the above table can be expressed as VDD33_IO_HSLV, VDDIO_IO_HSLV or VIO18_IO_HSLV according to specific pins.*

Table 3-20-2 Output voltage characteristics (for FT I/O pins)

Symbol	Parameter	Condition	Min.	Max.	Unit
V_{OL}	Output low level, 8 pins sink current	I_{IO} = 8mA 2.7V≤V*≤3.6V, V*_IO_HSLV = 0 1.6V≤V*≤2.7V, V*_IO_HSLV = 1		0.4	V
V_{OH}	Output high level, 8 pins output current		V*-0.4		
V_{OL}	Output low level, 8 pins sink current	I_{IO} = 20mA, 2.7V≤V*≤3.6V, V*_IO_HSLV = 0		1.0	V
V_{OH}	Output high level, 8 pins output current		V*-1.0		
V_{OL}	Output low level, 8 pins sink current	I_{IO} = 5mA, 1.6V≤V*≤2.7V, V*_IO_HSLV = 0		0.4	V
V_{OH}	Output high level, 8 pins output current		V*-0.4		

Note: 1. V in the above table can be expressed as V_{DDIO}, V_{IO18} or V_{DD33} according to specific pins; bit V*_IO_HSLV in the above table can be expressed as VDD33_IO_HSLV, VDDIO_IO_HSLV or VIO18_IO_HSLV according to specific pins.*

Table 3-20-3 Output voltage characteristics (for PC13~PC15 pins)

Symbol	Parameter	Condition	Min.	Max.	Unit
V_{OL}	Output low level, 3 pins sink current	I_{IO} = 8mA 2.7V≤ V_{DD33}/V_{BAT} ≤3.6V		0.25	V
V_{OH}	Output high level, 3 pins output current	I_{IO} = 3mA 2.7V≤ V_{DD33}/V_{BAT} ≤3.6V	$V_{DD33/BAT}$-0.4		
V_{OL}	Output low level, 3 pins sink current	I_{IO} = 4mA 1.8V≤ V_{DD33}/V_{BAT} ≤3.6V		0.25	V

V_{OH}	Output high level, 3 pins output current	I_{IO} = 1.5mA 1.8V≤ V_{DD33}/V_{BAT} ≤3.6V	$V_{DD33/BAT}$-0.4		

Note: For the CH32H417 chip, pins PC13 to PC15 are powered by V_{DD33} or V_{BAT} depending on the situation.

Table 3-21-1 Input-output AC characteristics (VDD33/VDDIO/VIO18_IO_HSLV = 0, exclude FT I/O pin and PC13~PC15 pin)

MODEx[1:0] Configuration	Symbol	Parameter	Condition	Min.	Max.	Unit
00	$F_{max(IO)out}$	Maximum frequency	CL=50pF, V* = 2.7-3.6V		40	MHz
			CL=50pF, V* = 1.6-2.7V		18	MHz
			CL=30pF, V* = 2.7-3.6V		50	MHz
			CL=30pF, V* = 1.6-2.7V		22	MHz
			CL=10pF, V* = 2.7-3.6V		70	MHz
			CL=10pF, V* = 1.6-2.7V		28	MHz
	$t_r/t_{f(IO)out}$	Output the rising time from low to high level, the falling time from high to low level	CL=50pF, V* = 2.7-3.6V		8	ns
			CL=50pF, V* = 1.6-2.7V		15	ns
			CL=30pF, V* = 2.7-3.6V		6	ns
			CL=30pF, V* = 1.6-2.7V		12	ns
			CL=10pF, V* = 2.7-3.6V		4	ns
			CL=10pF, V* = 1.6-2.7V		8	ns
01	$F_{max(IO)out}$	Maximum frequency	CL=50pF, V* = 2.7-3.6V		75	MHz
			CL=50pF, V* = 1.6-2.7V		35	MHz
			CL=30pF, V* = 2.7-3.6V		100	MHz
			CL=30pF, V* = 1.6-2.7V		40	MHz
			CL=10pF, V* = 2.7-3.6V		180	MHz
			CL=10pF, V* = 1.6-2.7V		50	MHz
	$t_r/t_{f(IO)out}$	Output the rising time from low to high level, the falling time from high to low level	CL=50pF, V* = 2.7-3.6V		4.4	ns
			CL=50pF, V* = 1.6-2.7V		8.5	ns
			CL=30pF, V* = 2.7-3.6V		3.2	ns
			CL=30pF, V* = 1.6-2.7V		6	ns
			CL=10pF, V* = 2.7-3.6V		1.7	ns
			CL=10pF, V* = 1.6-2.7V		3.5	ns
10	$F_{max(IO)out}$	Maximum frequency	CL=50pF, V* = 2.7-3.6V		75	MHz
			CL=50pF, V* = 1.6-2.7V		40	MHz
			CL=30pF, V* = 2.7-3.6V		110	MHz
			CL=30pF, V* = 1.6-2.7V		50	MHz
			CL=10pF, V* = 2.7-3.6V		200	MHz
			CL=10pF, V* = 1.6-2.7V		65	MHz
	$t_r/t_{f(IO)out}$	Output the rising time from low to high level, the falling time from high to low level	CL=50pF, V* = 2.7-3.6V		4.3	ns
			CL=50pF, V* = 1.6-2.7V		8.2	ns
			CL=30pF, V* = 2.7-3.6V		3	ns
			CL=30pF, V* = 1.6-2.7V		5.6	ns
			CL=10pF, V* = 2.7-3.6V		1.5	ns

			CL=10pF, V* = 1.6-2.7V		3	ns
11	$F_{max(IO)out}$	Maximum frequency	CL=50pF, V* = 2.7-3.6V		75	MHz
			CL=50pF, V* = 1.6-2.7V		40	MHz
			CL=30pF, V* = 2.7-3.6V		120	MHz
			CL=30pF, V* = 1.6-2.7V		55	MHz
			CL=10pF, V* = 2.7-3.6V		200	MHz
			CL=10pF, V* = 1.6-2.7V		70	MHz
	$t_r/t_{f(IO)out}$	Output the rising time from low to high level, the falling time from high to low level	CL=50pF, V* = 2.7-3.6V		4.2	ns
			CL=50pF, V* = 1.6-2.7V		8	ns
			CL=30pF, V* = 2.7-3.6V		2.8	ns
			CL=30pF, V* = 1.6-2.7V		5.4	ns
			CL=10pF, V* = 2.7-3.6V		1.5	ns
			CL=10pF, V* = 1.6-2.7V		2.8	ns

Note: 1. All of the above are guaranteed as design parameters.

2. In the above table, V can be expressed as V_{DDIO}, V_{IO18} or V_{DD33} depending on the specific pin.*

Table 3-21-2 Input-output AC characteristics (VDD33/VDDIO/VIO18_IO_HSLV = 1, exclude FT I/O pin and PC13~PC15 pin)

MODEx[1:0] Configuration	Symbol	Parameter	Condition	Min.	Max.	Unit
00	$F_{max(IO)out}$	Maximum frequency	CL=50pF, V* = 2.7-3.6V		75	MHz
			CL=50pF, V* = 1.6-2.7V		35	MHz
			CL=30pF, V* = 2.7-3.6V		95	MHz
			CL=30pF, V* = 1.6-2.7V		45	MHz
			CL=10pF, V* = 2.7-3.6V		130	MHz
			CL=10pF, V* = 1.6-2.7V		55	MHz
	$t_r/t_{f(IO)out}$	Output the rising time from low to high level, the falling time from high to low level	CL=50pF, V* = 2.7-3.6V		4.3	ns
			CL=50pF, V* = 1.6-2.7V		8.3	ns
			CL=30pF, V* = 2.7-3.6V		3.3	ns
			CL=30pF, V* = 1.6-2.7V		6.4	ns
			CL=10pF, V* = 2.7-3.6V		2.2	ns
			CL=10pF, V* = 1.6-2.7V		4.2	ns
01	$F_{max(IO)out}$	Maximum frequency	CL=50pF, V* = 2.7-3.6V		110	MHz
			CL=50pF, V* = 1.6-2.7V		60	MHz
			CL=30pF, V* = 2.7-3.6V		175	MHz
			CL=30pF, V* = 1.6-2.7V		90	MHz
			CL=10pF, V* = 2.7-3.6V		230	MHz
			CL=10pF, V* = 1.6-2.7V		140	MHz
	$t_r/t_{f(IO)out}$	Output the rising time from low to high level, the falling time from high to low level	CL=50pF, V* = 2.7-3.6V		2.8	ns
			CL=50pF, V* = 1.6-2.7V		5.3	ns
			CL=30pF, V* = 2.7-3.6V		1.8	ns
			CL=30pF, V* = 1.6-2.7V		3.6	ns
			CL=10pF, V* = 2.7-3.6V		0.9	ns

			CL=10pF, V* = 1.6-2.7V		1.9	ns
10	$F_{max(IO)out}$	Maximum frequency	CL=50pF, V* = 2.7-3.6V		120	MHz
			CL=50pF, V* = 1.6-2.7V		64	MHz
			CL=30pF, V* = 2.7-3.6V		170	MHz
			CL=30pF, V* = 1.6-2.7V		95	MHz
			CL=10pF, V* = 2.7-3.6V		240	MHz
			CL=10pF, V* = 1.6-2.7V		160	MHz
	$t_r/t_{f(IO)out}$	Output the rising time from low to high level, the falling time from high to low level	CL=50pF, V* = 2.7-3.6V		2.7	ns
			CL=50pF, V* = 1.6-2.7V		5.2	ns
			CL=30pF, V* = 2.7-3.6V		1.7	ns
			CL=30pF, V* = 1.6-2.7V		3.4	ns
			CL=10pF, V* = 2.7-3.6V		0.8	ns
			CL=10pF, V* = 1.6-2.7V		1.7	ns
11	$F_{max(IO)out}$	Maximum frequency	CL=50pF, V* = 2.7-3.6V		120	MHz
			CL=50pF, V* = 1.6-2.7V		65	MHz
			CL=30pF, V* = 2.7-3.6V		170	MHz
			CL=30pF, V* = 1.6-2.7V		100	MHz
			CL=10pF, V* = 2.7-3.6V		250	MHz
			CL=10pF, V* = 1.6-2.7V		180	MHz
	$t_r/t_{f(IO)out}$	Output the rising time from low to high level, the falling time from high to low level	CL=50pF, V* = 2.7-3.6V		2.7	ns
			CL=50pF, V* = 1.6-2.7V		5.1	ns
			CL=30pF V* = 2.7-3.6V		1.7	ns
			CL=30pF, V* = 1.6-2.7V		3.4	ns
			CL=10pF, V* = 2.7-3.6V		0.8	ns
			CL=10pF, V* = 1.6-2.7V		1.6	ns

Note: 1. All of the above are guaranteed as design parameters.

2. In the above table, V can be expressed as V_{DDIO}, V_{IO18} or V_{DD33} depending on the specific pin.*

Table 3-21-3 Input-output AC characteristics (VDD33/VDDIO/VIO18_IO_HSLV = 0, for FT I/O pin)

MODEx[1:0] Configuration	Symbol	Parameter	Condition	Min.	Max.	Unit
00	$F_{max(IO)out}$	Maximum frequency	CL=50pF, V* = 2.7-3.6V		30	MHz
			CL=50pF, V* = 1.6-2.7V		14	MHz
			CL=30pF, V* = 2.7-3.6V		35	MHz
			CL=30pF, V* = 1.6-2.7V		20	MHz
			CL=10pF, V* = 2.7-3.6V		43	MHz
			CL=10pF, V* = 1.6-2.7V		23	MHz
	$t_r/t_{f(IO)out}$	Output the rising time from low to high level, the falling time from high to low level	CL=50pF, V* = 2.7-3.6V		10	ns
			CL=50pF, V* = 1.6-2.7V		22	ns
			CL=30pF, V* = 2.7-3.6V		7.6	ns
			CL=30pF, V* = 1.6-2.7V		14	ns
			CL=10pF, V* = 2.7-3.6V		5	ns
			CL=10pF, V* = 1.6-2.7V		9	ns

01	$F_{max(IO)out}$	Maximum frequency	CL=50pF, V* = 2.7-3.6V		32	MHz
			CL=50pF, V* = 1.6-2.7V		16	MHz
			CL=30pF, V* = 2.7-3.6V		45	MHz
			CL=30pF, V* = 1.6-2.7V		25	MHz
			CL=10pF, V* = 2.7-3.6V		90	MHz
			CL=10pF, V* = 1.6-2.7V		50	MHz
	$t_r/t_{f(IO)out}$	Output the rising time from low to high level, the falling time from high to low level	CL=50pF, V* = 2.7-3.6V		8	ns
			CL=50pF, V* = 1.6-2.7V		15	ns
			CL=30pF, V* = 2.7-3.6V		5.5	ns
			CL=30pF, V* = 1.6-2.7V		10.5	ns
			CL=10pF, V* = 2.7-3.6V		3	ns
			CL=10pF, V* = 1.6-2.7V		5.5	ns
10	$F_{max(IO)out}$	Maximum frequency	CL=50pF, V* = 2.7-3.6V		35	MHz
			CL=50pF, V* = 1.6-2.7V		18	MHz
			CL=30pF, V* = 2.7-3.6V		50	MHz
			CL=30pF, V* = 1.6-2.7V		28	MHz
			CL=10pF, V* = 2.7-3.6V		100	MHz
			CL=10pF, V* = 1.6-2.7V		55	MHz
	$t_r/t_{f(IO)out}$	Output the rising time from low to high level, the falling time from high to low level	CL=50pF, V* = 2.7-3.6V		8	ns
			CL=50pF, V* = 1.6-2.7V		15	ns
			CL=30pF, V* = 2.7-3.6V		5.5	ns
			CL=30pF, V* = 1.6-2.7V		11	ns
			CL=10pF, V* = 2.7-3.6V		3	ns
			CL=10pF, V* = 1.6-2.7V		5.5	ns
11	$F_{max(IO)out}$	Maximum frequency	CL=50pF, V* = 2.7-3.6V		37	MHz
			CL=50pF, V* = 1.6-2.7V		20	MHz
			CL=30pF, V* = 2.7-3.6V		55	MHz
			CL=30pF, V* = 1.6-2.7V		30	MHz
			CL=10pF, V* = 2.7-3.6V		110	MHz
			CL=10pF, V* = 1.6-2.7V		60	MHz
	$t_r/t_{f(IO)out}$	Output the rising time from low to high level, the falling time from high to low level	CL=50pF, V* = 2.7-3.6V		8	ns
			CL=50pF, V* = 1.6-2.7V		15	ns
			CL=30pF, V* = 2.7-3.6V		5.5	ns
			CL=30pF, V* = 1.6-2.7V		10	ns
			CL=10pF, V* = 2.7-3.6V		2.5	ns
			CL=10pF, V* = 1.6-2.7V		5.5	ns

Note: 1. All of the above are guaranteed as design parameters.

2. In the above table, V can be expressed as V_{DDIO}, V_{IO18} or V_{DD33} depending on the specific pin.*

Table 3-21-4 Input-output AC characteristics (VDD33/VDDIO/VIO18_IO_HSLV = 1, for FT I/O pin)

MODEx[1:0] Configuration	Symbol	Parameter	Condition	Min.	Max.	Unit
00	$F_{max(IO)out}$	Maximum frequency	CL=50pF, V* = 2.7-3.6V		45	MHz

			CL=50pF, V* = 1.6-2.7V		25	MHz
			CL=30pF, V* = 2.7-3.6V		50	MHz
			CL=30pF, V* = 1.6-2.7V		35	MHz
			CL=10pF, V* = 2.7-3.6V		55	MHz
			CL=10pF, V* = 1.6-2.7V		42	MHz
	$t_r/t_{f(IO)out}$	Output the rising time from low to high level, the falling time from high to low level	CL=50pF, V* = 2.7-3.6V		6.5	ns
			CL=50pF, V* = 1.6-2.7V		12	ns
			CL=30pF, V* = 2.7-3.6V		4.6	ns
			CL=30pF, V* = 1.6-2.7V		8.6	ns
			CL=10pF, V* = 2.7-3.6V		3	ns
			CL=10pF, V* = 1.6-2.7V		5.3	ns
01	$F_{max(IO)out}$	Maximum frequency	CL=50pF, V* = 2.7-3.6V		50	MHz
			CL=50pF, V* = 1.6-2.7V		25	MHz
			CL=30pF, V* = 2.7-3.6V		75	MHz
			CL=30pF, V* = 1.6-2.7V		36	MHz
			CL=10pF, V* = 2.7-3.6V		130	MHz
			CL=10pF, V* = 1.6-2.7V		70	MHz
	$t_r/t_{f(IO)out}$	Output the rising time from low to high level, the falling time from high to low level	CL=50pF, V* = 2.7-3.6V		5.5	ns
			CL=50pF, V* = 1.6-2.7V		10.5	ns
			CL=30pF, V* = 2.7-3.6V		3.7	ns
			CL=30pF, V* = 1.6-2.7V		7.2	ns
			CL=10pF, V* = 2.7-3.6V		2	ns
			CL=10pF, V* = 1.6-2.7V		3.8	ns
10	$F_{max(IO)out}$	Maximum frequency	CL=50pF, V* = 2.7-3.6V		55	MHz
			CL=50pF, V* = 1.6-2.7V		28	MHz
			CL=30pF, V* = 2.7-3.6V		80	MHz
			CL=30pF, V* = 1.6-2.7V		40	MHz
			CL=10pF, V* = 2.7-3.6V		135	MHz
			CL=10pF, V* = 1.6-2.7V		75	MHz
	$t_r/t_{f(IO)out}$	Output the rising time from low to high level, the falling time from high to low level	CL=50pF, V* = 2.7-3.6V		5.5	ns
			CL=50pF, V* = 1.6-2.7V		10.5	ns
			CL=30pF, V* = 2.7-3.6V		3.7	ns
			CL=30pF, V* = 1.6-2.7V		7.1	ns
			CL=10pF, V* = 2.7-3.6V		2	ns
			CL=10pF, V* = 1.6-2.7V		3.8	ns
11	$F_{max(IO)out}$	Maximum frequency	CL=50pF, V* = 2.7-3.6V		60	MHz
			CL=50pF, V* = 1.6-2.7V		30	MHz
			CL=30pF, V* = 2.7-3.6V		85	MHz
			CL=30pF, V* = 1.6-2.7V		45	MHz
			CL=10pF, V* = 2.7-3.6V		140	MHz
			CL=10pF, V* = 1.6-2.7V		80	MHz
	$t_r/t_{f(IO)out}$	Output the rising time from low to high level, the	CL=50pF, V* = 2.7-3.6V		5.5	ns
			CL=50pF, V* = 1.6-2.7V		10.5	ns

		falling time from high to low level	CL=30pF, V* = 2.7-3.6V		3.7	ns
			CL=30pF, V* = 1.6-2.7V		7.1	ns
			CL=10pF, V* = 2.7-3.6V		2	ns
			CL=10pF, V* = 1.6-2.7V		3.8	ns

Note: 1. All of the above are guaranteed as design parameters.

2. In the above table, V can be expressed as V_{DDIO}, V_{IO18} or V_{DD33} depending on the specific pin.*

3.3.11 NRST Pin Characteristics

Circuit reference design and requirements:

Figure 3-7 Typical circuit of external reset pin

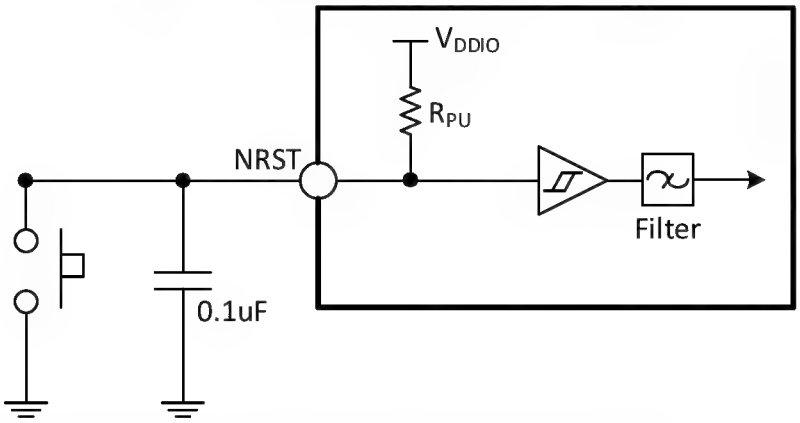

Note: The capacitors shown are optional and can be used to filter out key jitter.

Table 3-22 External reset pin characteristics

Symbol	Parameter	Condition	Min.	Typ.	Max.	Unit
$V_{IL(NRST)}$	NRST input low voltage		-0.3		$0.29*V_{DDIO}-0.07$	V
$V_{IH(NRST)}$	NRST input high voltage		$0.45*V_{DDIO}+0.41$		$V_{DDIO}+0.3$	V
$V_{hys(NRST)}$	NRST Schmitt trigger voltage hysteresis		150			mV
R_{PU}(1)	Pull-up equivalent resistance		30	40	55	kΩ
$V_{F(NRST)}$	NRST input can be filtered for pulse width				100	ns
$V_{NF(NRST)}$	NRST input cannot be filtered pulse width		300			ns

Note: The pull-up resistor is a real resistor in series with a switchable PMOS implementation. The resistance of this PMOS/NMOS switch is very small (about 10%).

3.3.12 TIM Characteristics

Table 3-23-1 TIM1/8/2/3/4/5/6/7 characteristics

Symbol	Parameter	Condition	Min.	Max.	Unit
$t_{res(TIM)}$	Timer reference clock		1		$t_{TIMxCLK}$
		$f_{TIMxCLK}$ = 144MHz	6.9		ns
F_{EXT}	Timer external clock frequency on CH1 to CH4		0	$f_{TIMxCLK}$/2	MHz

		$f_{TIMxCLK}$ = 144MHz	0	72	MHz
R_{esTIM}	Timer resolution			16	Bit
$t_{COUNTER}$	16-bit counter clock cycle when the internal clock is selected		1	65536	$t_{TIMxCLK}$
		$f_{TIMxCLK}$ = 144MHz	0.0069	455	us
t_{MAX_COUNT}	Maximum possible count			65535	$t_{TIMxCLK}$
		$f_{TIMxCLK}$ = 144MHz		39.8	s

Table 3-23-2 TIM9/10/11/12 characteristics

Symbol	Parameter	Condition	Min.	Max.	Unit
$t_{res(TIM)}$	Timer reference clock		1		$t_{TIMxCLK}$
		$f_{TIMxCLK}$ = 144MHz	6.9		ns
F_{EXT}	Timer external clock frequency on CH1 to CH4		0	$f_{TIMxCLK}/2$	MHz
		$f_{TIMxCLK}$ = 144MHz	0	72	MHz
R_{esTIM}	Timer resolution			32	Bit
$t_{COUNTER}$	32-bit counter clock cycle when the internal clock is selected		1	2^{32}	$t_{TIMxCLK}$
		$f_{TIMxCLK}$ = 144MHz	0.0069	$2^{32}/144$	us
t_{MAX_COUNT}	Maximum possible count			$2^{32}-1$	$t_{TIMxCLK}$
		$f_{TIMxCLK}$ = 144MHz		$(2^{32}-1)*2^{32}/144$	us

3.3.13 I2C Interface Characteristics

Figure 3-8 I2C bus timing diagram

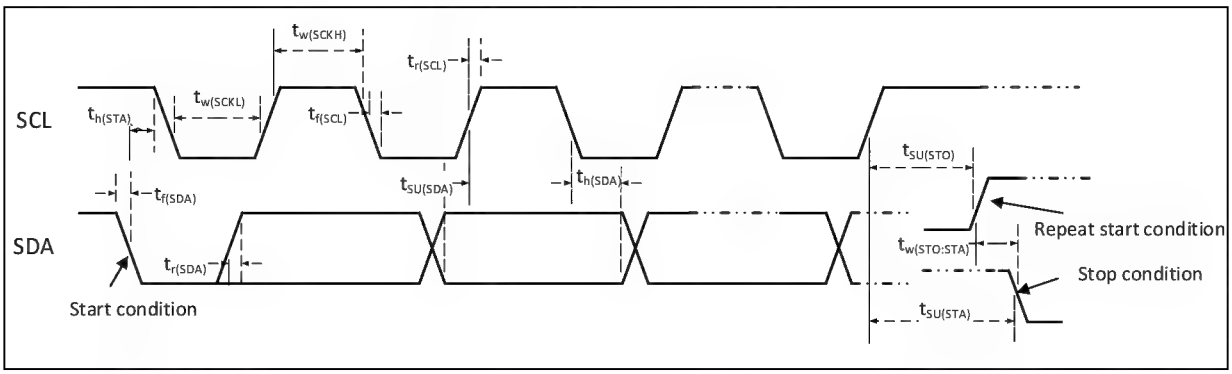

Table 3-24 I2C interface characteristics

Symbol	Parameter	Standard I2C		Fast I2C		Unit
		Min.	Max.	Min.	Max.	
$t_{w(SCKL)}$	SCL clock low level time	4.7		1.2		us
$t_{w(SCKH)}$	SCL clock high level time	4.0		0.6		us
$t_{SU(SDA)}$	SDA data setup time	250		100		ns
$t_{h(SDA)}$	SDA data hold time	0		0	900	ns
$t_{r(SDA)}/t_{r(SCL)}$	SDA and SCL rise time		1000	20		ns
$t_{f(SDA)}/t_{f(SCL)}$	SDA and SCL fall time		300			ns
$t_{h(STA)}$	Start condition hold time	4.0		0.6		us
$t_{SU(STA)}$	Repeated start condition setup time	4.7		0.6		us

$t_{SU(STO)}$	Stop condition setup time	4.0		0.6		us
$t_{w(STO:STA)}$	Time from stop condition to start condition (bus free)	4.7		1.2		us
C_b	Capacitive load for each bus		400,		400	pF

3.3.14 I3C Interface Characteristics

Table 3-25 I3C interface characteristics

Symbol	Parameter	Condition	Min.	Max.	Unit
$t_{r(SDA)_OD}$(1)	SDA rise time in open-drain mode	$1.71<V_{IO18}<3.6V$	100		ns
$t_{r(SDA)_PP}$(1)	SDA rise time in push-pull mode	$1.71<V_{IO18}<3.6V$	5.1		ns

Note: 1. $t_{r(SDA)_OD}$ and $t_{r(SDA)_PP}$ are guaranteed as design parameters and can be configured through register R32_I3C_TIMINGR0. Other timing parameters can be referred to the MIPI protocol.

3.3.15 SPI Interface Characteristics

Figure 3-9 SPI timing diagram in Master mode

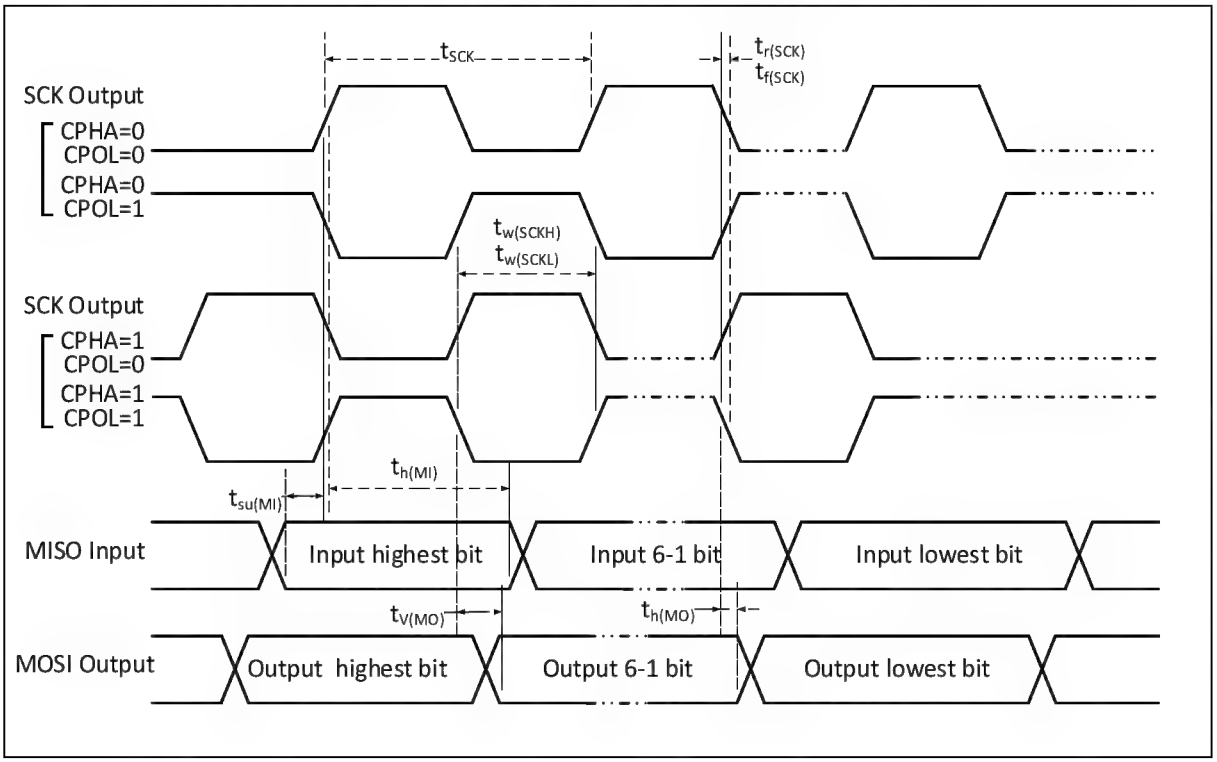

Figure 3-10 SPI timing diagram in Slave mode (CPHA=0)

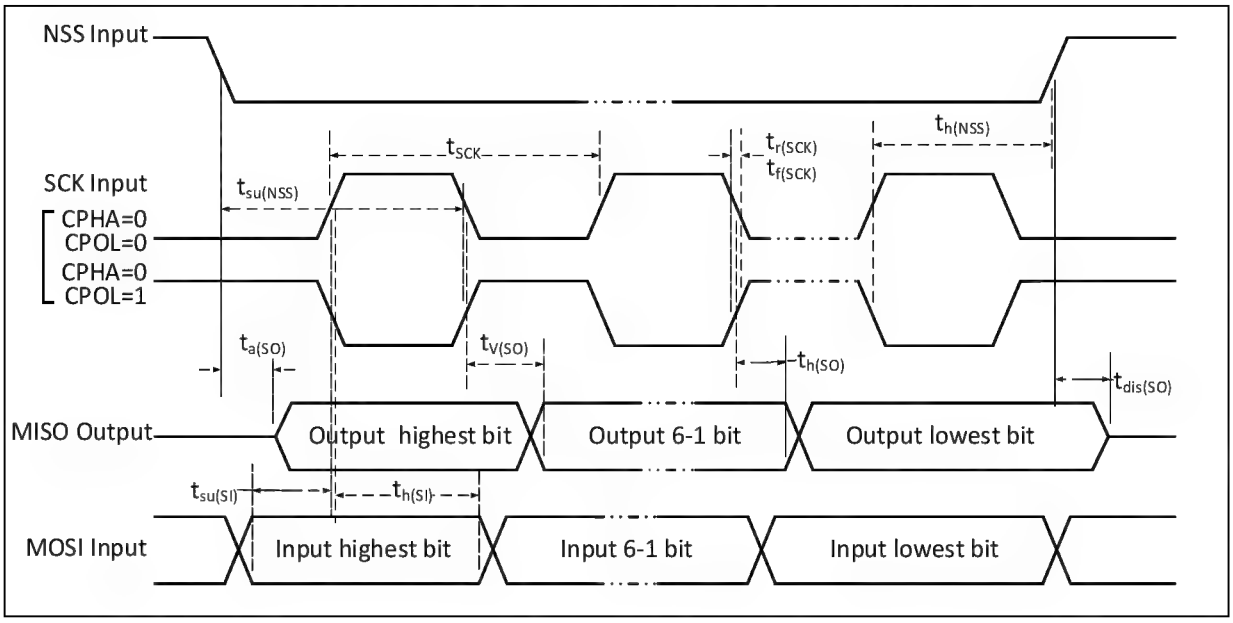

Figure 3-11 SPI timing diagram in Slave mode (CPHA=1)

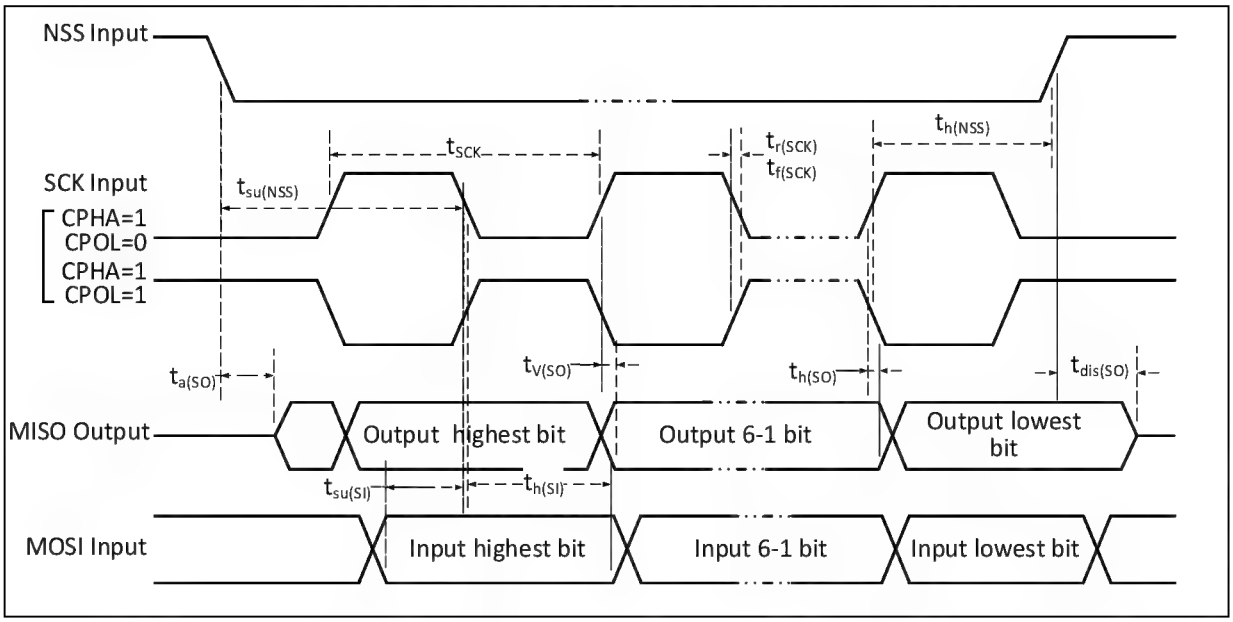

Table 3-26 SPI interface characteristics

Symbol	Parameter	Condition	Min.	Max.	Unit
f_{SCK}/t_{SCK}	SPI clock frequency	Master mode		75	MHz
		Slave mode		75	MHz
$t_{r(SCK)}/t_{f(SCK)}$	SPI clock rise and fall time	Load capacitance: C = 30pF		20	ns
$t_{SU(NSS)}$	NSS setup time	Slave mode	$2*t_{HCLK}$		ns
$t_{h(NSS)}$	NSS hold time	Slave mode	$2*t_{HCLK}$		ns
$t_{w(SCKH)}/t_{w(SCKL)}$	SCK high-level and low-level time	Master mode, f_{HCLK} = 36MHz, prescaler factor =4	40	60	ns

$T_{su\ (MI)}$	Data input setup time	Master mode	5		ns
$t_{su\ (SI)}$		Slave mode	5		ns
$t_{h\ (MI)}$	Data input hold time	Master mode	5		ns
$t_{h\ (SI)}$		Slave mode	4		ns
$t_{a\ (SO)}$	Data output access time	Slave mode, f_{HCLK} = 20MHz	0	$1*t_{HCLK}$	ns
$t_{dis\ (SO)}$	Data output disable time	Slave mode	0	10	ns
$t_{V\ (SO)}$	Data output valid time	Slave mode (After enabling edge)		25	ns
$t_{V\ (MO)}$		Master mode (After enabling edge)		5	ns
$t_{h\ (SO)}$	Data output hold time	Slave mode (After enabling edge)	15		ns
$t_{h\ (MO)}$		Master mode (After enabling edge)	0		ns

3.3.16 QSPI Interface Characteristics

Table 3-27 QSPI interface I/O characteristics

Symbol	Parameter	Condition	Min.	Max.	Unit
f_{SCK}/t_{SCK}	QSPI clock frequency			75	MHz
$t_{r(SCK)}/t_{f(SCK)}$	QSPI clock rise and fall time	Load capacitance: C = 30pF		20	ns
$t_{w\ (SCKH)}$ /$t_{w\ (SCKL)}$	SCK high-level and low-level time	f_{HCLK} = 36MHz, prescaler factor = 4	40	60	ns
$t_{SU\ (SIO*)}$	Data input setup time		5		ns
$t_{h\ (SIO*)}$	Data input hold time		5		ns
$t_{V\ (SIO*)}$	Data output valid time			5	ns
$t_{h\ (SIO*)}$	Data output hold time		0		ns

3.3.17 I2S Interface Characteristics

Figure 3-12 I2S Bus master mode timing diagram (Philips protocol)

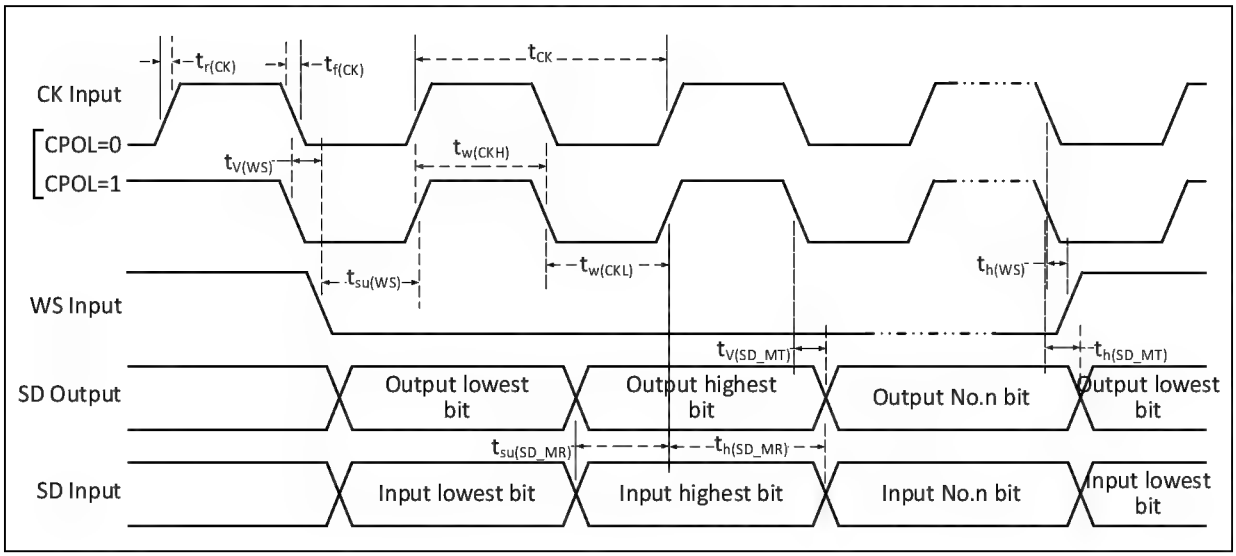

Figure 3-13 I2S Bus slave mode timing diagram (Philips protocol)

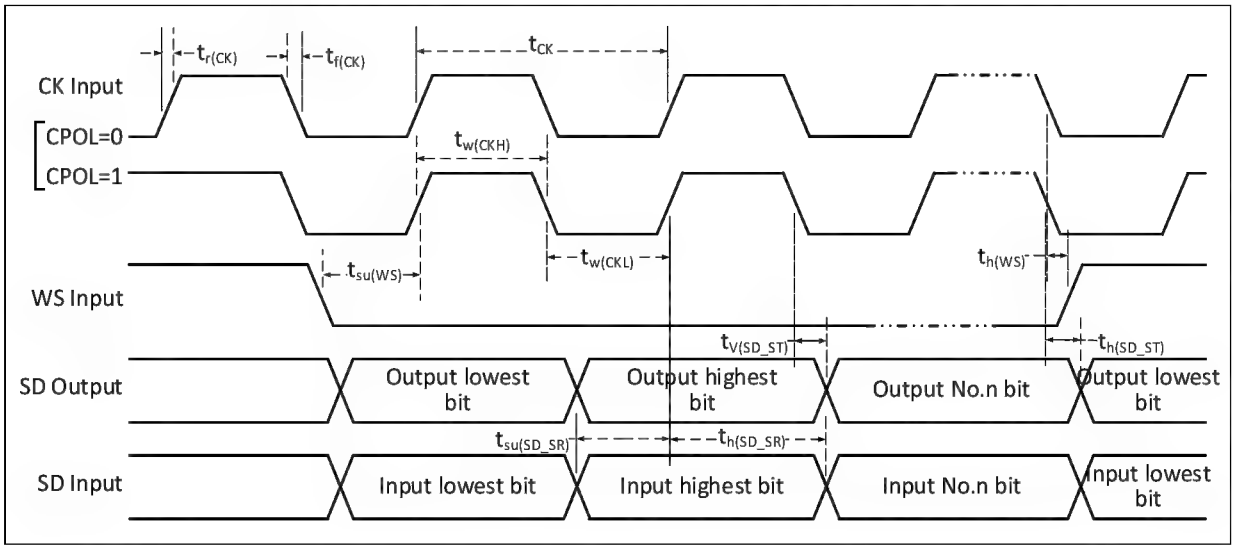

Table 3-28 I2S interface characteristics

Symbol	Parameter	Condition	Min.	Max.	Unit
f_{CK}/t_{CK}	I2S clock frequency	Master mode		8	MHz
		Slave mode		8	MHz
$t_{r(CK)}/t_{f(CK)}$	I2S clock rise and fall time	Load capacitance: C = 30pF		20	ns
$t_{V(WS)}$	WS valid time	Master mode		5	ns
$t_{SU(WS)}$	WS setup time	Slave mode	10		ns
$t_{h(WS)}$	WS hold time	Master mode	0		ns
		Slave mode	0		ns
$t_{w(CKH)}/t_{w(CKL)}$	SCK high level and low level time	Master mode, f_{HCLK} = 36MHz prescaler factor = 4	40	60	%
$t_{SU(SD_MR)}$ $t_{SU(SD_SR)}$	Data input setup time	Master mode	8		ns
		Slave mode	8		ns
$t_{h(SD_MR)}$ $t_{h(SD_SR)}$	Data input hold time	Master mode	5		ns
		Slave mode	4		ns
$t_{h(SD_MT)}$	Data output hold time	Slave mode (After enabling edge)		5	ns
$t_{h(SD_ST)}$		Master mode (After enabling edge)		5	ns
$t_{V(SD_MT)}$	Data output valid time	Slave mode (After enabling edge)		5	ns
$t_{v(SD_ST)}$		Master mode (After enabling edge)		4	ns

3.3.18 USB PD Interface Characteristics

Table 3-29-1 PD interface I/O characteristics

Symbol	Parameter	Condition	Min.	Typ.	Max.	Unit
t_{Rise}	Rising time	The amplitude is between 10% and 90%, and the minimum value is the	300	430		ns

		time under no-load condition.				
t_{Fall}	Falling time	The amplitude is between 10% and 90%, and the minimum value is the time under no-load condition.	300	430		ns
V_{Swing}	Output voltage swing (peak-to-peak)		1.04	1.12	1.20	V

Table 3-29-2 Type-C I/O characteristics

Symbol	Parameter	Condition	Min.	Typ.	Max.	Unit
V_{CCIL}(1)	CC pin input low level voltage	USBPD_CC_HVT=0, FT I/O input	0		0.8	V
		USBPD_CC_HVT=1, high threshold detection input	0		2.0	
V_{CCIH}(1)	CC pin input high voltage	USBPD_CC_HVT=0, FT I/O input	2.0		V* (2)	V
		USBPD_CC_HVT=1, high threshold detection input	2.45		V* (2)	
V_{CChys}	Hysteresis voltage	USBPD_CC_HVT=0, FT I/O input	90			mV
		USBPD_CC_HVT=1, high threshold detection input		120		
I_{pu}	Pull-up current	Pin < V*(2)-0.6V		80		uA
				180		uA
				330		uA
Rd	Built-in Rd pull-down resistor on CC pin (for CC1R/CC2R)	V_{DD33} ≥ 1.6V or external pull-up 330uA		5.1		kΩ

Note: 1. V_{CCIL} and V_{CCIH} corresponding to USBPD_CC_HVT =1 are guaranteed as design parameters.

2. For CH32H417 chips, V is V_{DDIO}; for CH32H416 and CH32H415 chips, V* is V_{DD33}.*

3.3.19 USB 2.0 Interface Characteristics

Table 3-30 USB 2.0 interface I/O characteristics

Symbol	Parameter	Condition	Min.	Typ.	Max.	Unit
V_{DD33}	USB 2.0 operating voltage		3.2		3.45	V
V_{SE}	Single ended receiver threshold	V_{DD33} = 3.3V	1.2		1.9	V
V_{OL}	Static output low level				0.3	V
V_{OH}	Static output high level		2.8		3.6	V
V_{HSOI}	High-speed idle level		-10		10	mV
V_{HSOH}	High-speed data high level		360		440	mV
V_{HSOL}	High-speed data low level		-10		10	mV
R_{USBPU}	USB pin pull-up resistor		1.3	1.5	1.8	kΩ
R_{USBPD}	USB pin pull-down resistor		13	15	18	kΩ
V_{BC_REF}	BC CMP reference voltage			0.4		V
V_{BC_SRC}	BC protocol output voltage			0.6		V

3.3.20 USB 3.2 Gen1 Interface Characteristics

The CH32H417 complies with the features of the USB 3.2 Gen1 specification, for more information please refer to the relevant protocol specification.

3.3.21 SerDes Interface Characteristics

Table 3-31 SerDes interface I/O characteristics

Symbol	Parameter	Condition	Min.	Typ.	Max.	Unit
V_{DD33}	SerDes operating voltage		3.2		3.45	V
$T_{SERDRAT}$	Data rate	Short distance	0.5		1.5	Gb/s
		100m Class 6 differential network cable		0.5		
$V_{TX-DIFF-PP}$	Differential transmission peak-to-peak voltage amplitude	TX_OUTPUT_SWING[1:0] = 00	1.35	1.5	1.65	V
		TX_OUTPUT_SWING[1:0] = 01	1.62	1.8	1.98	
		TX_OUTPUT_SWING[1:0] = 10	1.89	2.1	2.31	
		TX_OUTPUT_SWING[1:0] = 11	2.16	2.4	2.64	
V_{TX-DE}	Pre-emphasis amplitude	TX_DE_EMPHASIS[1:0] = 00		0		dB
		TX_DE_EMPHASIS[1:0] = 01		3		
		TX_DE_EMPHASIS[1:0] = 10		6		
		TX_DE_EMPHASIS[1:0] = 11		9		
R_{TX}	Differential output impedance			100		Ω
$V_{RX-DIFF-PP}$	Differential reception peak-to-peak voltage amplitude		0.15	0.3		V
R_{RX}	Differential input impedance			100		Ω
V_{RX-VCM}	Receiving common-mode voltage			0.5* V_{DD33}		V
$C_{AC-COUPLING}$	AC coupling capacitance		75	100	200	nF

3.3.22 SDIO Interface Characteristics

Table 3-32 SDIO interface I/O characteristics

Symbol	Parameter	Condition	Min.	Max.	Unit
f_{CK}/t_{CK}	Clock frequency in data transmission mode	CL≤30pF		100	MHz
$t_{W(CKL)}$	Clock low level time	CL≤30pF	3		ns
$t_{W(CKH)}$	Clock high level time	CL≤30pF	3		
$t_{r(CK)}$	Rising time	CL≤30pF		2	
$t_{f(CK)}$	Falling time	CL≤30pF		2	
CMD/DAT input (Refer to CK)					

t_{ISU}	Input setup time	CL≤30pF		5		ns
t_{IH}	Input holding time	CL≤30pF		1		
In high-speed mode, CMD/DAT output (refer to CK)						
t_{OV}	Output valid time	CL≤30pF	Master mode		3	ns
			Slave mode		9	
t_{OH}	Output holding time	CL≤30pF		10		
In default mode, CMD/DAT output (refer to CK)						
t_{OVD}	Output valid default time	CL≤30pF	Master mode		4	ns
			Slave mode		10	
t_{OHD}	Output holding default time	CL≤30pF		10		

3.3.23 SDMMC Interface Characteristics

Figure 3-14 SD high-speed mode timing diagram

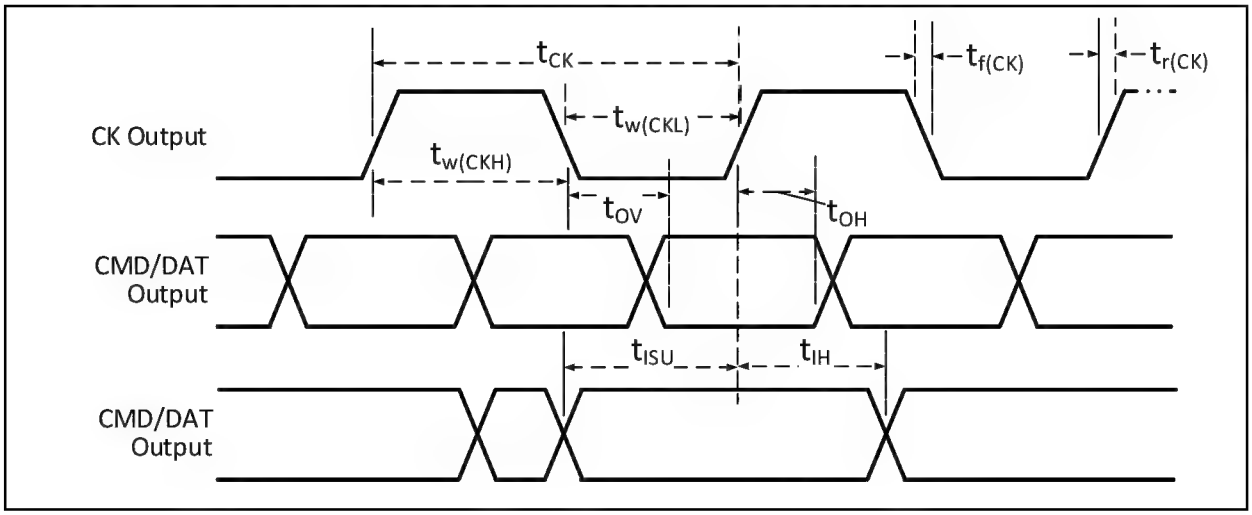

Figure 3-15 SD default mode timing diagram

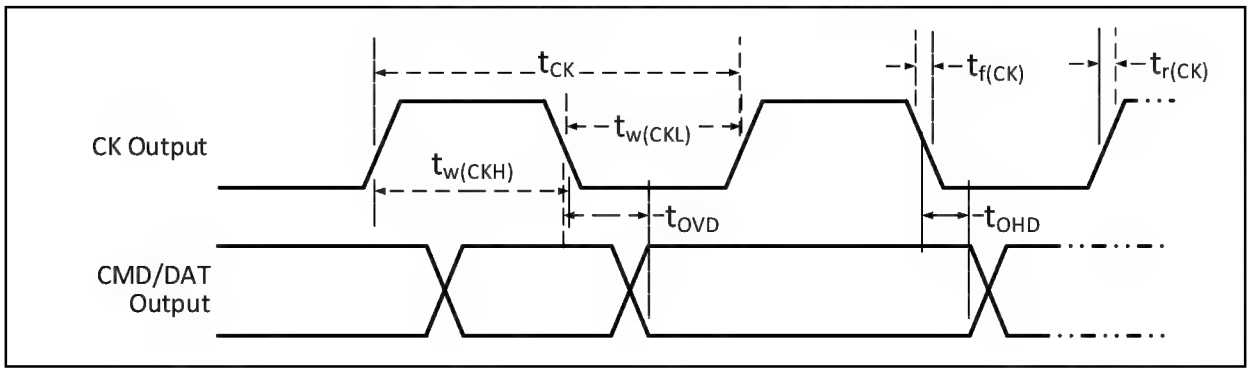

Table 3-33 SDMMC interface characteristics

Symbol	Parameter	Condition	Min.	Max.	Unit
f_{CK}/t_{CK}	Clock frequency in data transmission mode	CL≤30pF		100	MHz
		CL≤10pF, V_{DD18} = 1.8V		200	MHz

$t_{W(CKL)}$	Clock low level time	CL≤10pF		2.2		ns
$t_{W(CKH)}$	Clock high level time	CL≤10pF		2,2		
$t_{r(CK)}$	Rising time	CL≤10pF			1.2	
$t_{f(CK)}$	Falling time	CL≤10pF			1.2	
CMD/DAT input (Refer to CK)						
t_{ISU}	Input setup time	CL≤10pF		0.4		ns
t_{IH}	Input holding time	CL≤10pF		0.4		
In high-speed mode, CMD/DAT output (refer to CK)						
t_{OV}	Output valid time	CL≤10pF	Master mode		1.2	ns
			Slave mode		6	
t_{OH}	Output holding time	CL≤10pF		4.5		
In default mode, CMD/DAT output (refer to CK).						
t_{OVD}	Output valid default time	CL≤10pF	Master mode		1.2	ns
			Slave mode		6	
t_{OHD}	Output holding default time	CL≤10pF		4.5		

Note: At higher clock frequency, if the recommended timing adjustment register value can't communicate stably, users need to initiate the bus sampling tuning sequence to find a better sampling point.

3.3.24 UHSIF Interface Characteristics

Table 3-34 UHSIF interface characteristics

Symbol	Parameter	Condition	Min.	Max.	Unit
f_{CK}/t_{CK}	Clock frequency in data transmission mode	CL≤10pF, V_{DD18} = 1.8V		125	MHz
t_{ISU}	Input setup time	CL≤10pF	2		ns
t_{IH}	Input holding time	CL≤10pF	1		
t_{OV}	Output valid time	CL≤10pF		2	ns
t_{OH}	Output holding time	CL≤10pF	4.5		

3.3.25 FSMC Characteristics

Figure 3-16 Asynchronous bus multiplexing PSRAM/NOR read operation waveform

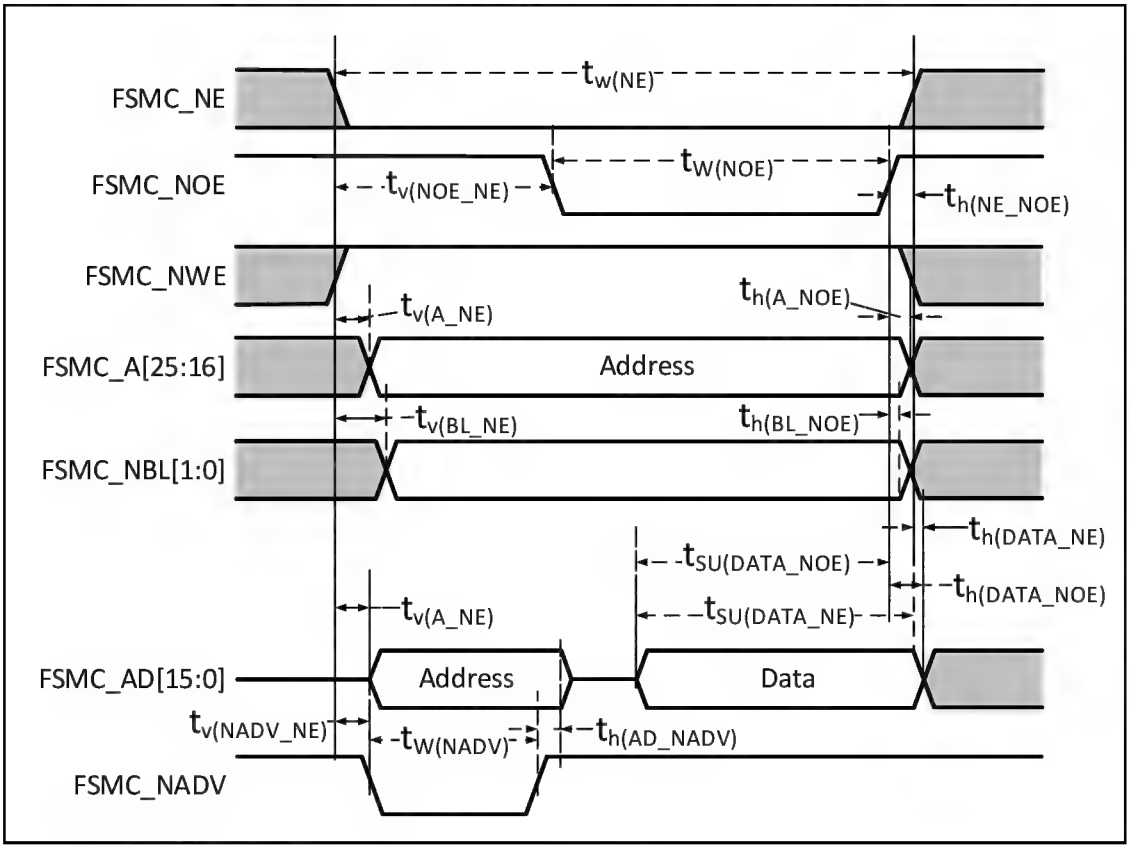

Table 3-35 Timing of PSRAM/NOR read operations for asynchronous bus multiplexing

Symbol	Parameter	Min.	Max.	Unit
$t_{W(NE)}$	FSMC_NE low level time	$7*t_{HCLK}$		ns
$t_{V(NOE_NE)}$	FSMC_NE low to FSMC_NOE low	0		
$t_{W(NOE)}$	FSMC_NOE low time	$4*t_{HCLK}$		
$t_{h(NE_NOE)}$	FSMC_NOE high to FSMC_NE high hold time	0		
$t_{V(A_NE)}$	FSMC_NE low to FSMC_A valid	0	5	
$t_{V(NADV_NE)}$	FSMC_NE low to FSMC_NADV low	0	5	
$t_{W(NADV)}$	FSMC_NADV low time	t_{HCLK}		
$t_{h(AD_NADV)}$	FSMC_AD (address) valid hold time after FSMC_NADV high	$2*t_{HCLK}$		
$t_{h(A_NOE)}$	Address hold time after FSMC_NOE high	0		
$t_{h(BL_NOE)}$	FSMC_BL hold time after FSMC_NOE high	0		
$t_{V(BL_NE)}$	FSMC_NE low to FSMC_BL valid	0	5	
$t_{SU(DATA_NE)}$	Data to FSMC_NE high build time	$3*t_{HCLK}$		
$t_{SU(DATA_NOE)}$	Data to FSMC_NOE high build time	$3*t_{HCLK}$		
$t_{h(DATA_NE)}$	Data hold time after FSMC_NE high	0		
$t_{h(DATA_NOE)}$	Data hold time after FSMC_NOE high	0		

Figure 3-17 Asynchronous bus multiplexing PSRAM/NOR write operation waveform

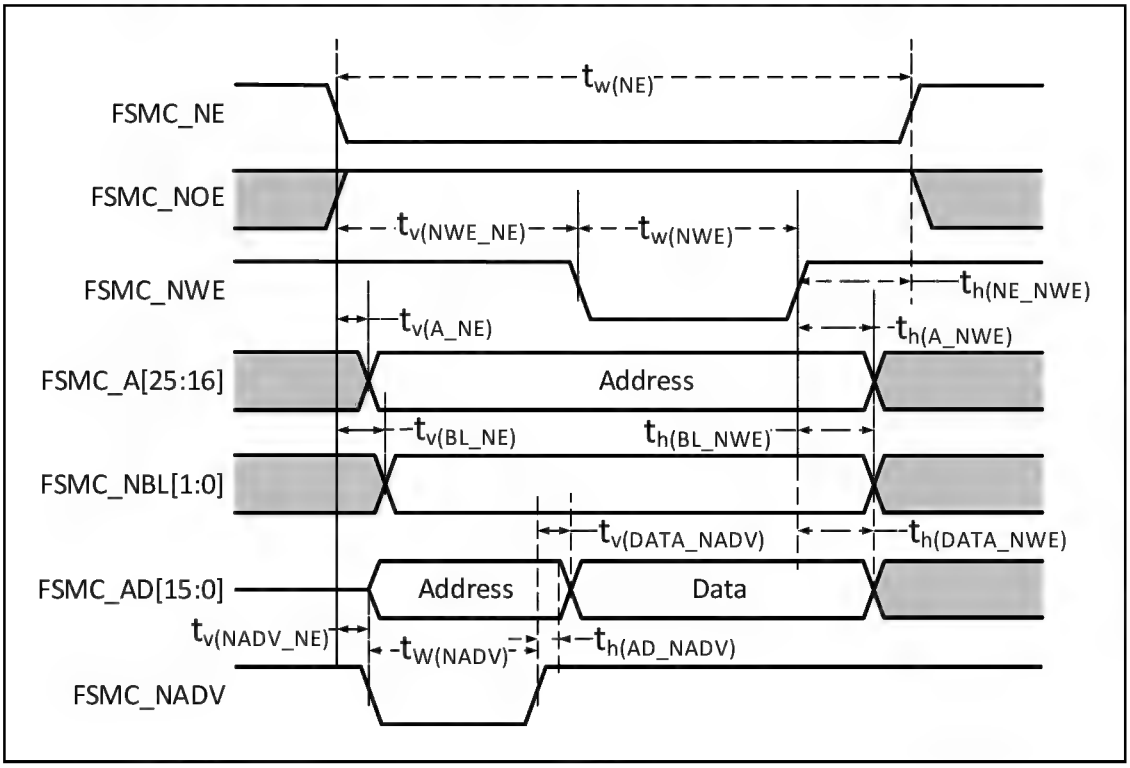

Table 3-36 Timing of PSRAM/NOR write operations for asynchronous bus multiplexing

Symbol	Parameter	Min.	Max.	Unit
$t_{W(NE)}$	FSMC_NE low level time	$5*t_{HCLK}$		ns
$t_{V(NEW_NE)}$	FSMC_NE low to FSMC_NWE low	$3*t_{HCLK}$		
$t_{W(NWE)}$	FSMC_NWE low time	$2*t_{HCLK}$		
$t_{h(NE_NWE)}$	FSMC_NWE high to FSMC_NE high hold time	t_{HCLK}		
$t_{V(A_NE)}$	FSMC_NE low to FSMC_A valid	0	5	
$t_{V(NADV_NE)}$	FSMC_NE low to FSMC_NADV low	0	5	
$t_{W(NADV)}$	FSMC_NADV low time	t_{HCLK}		
$t_{h(AD_NADV)}$	FSMC_AD (address) valid hold time after FSMC_NADV high	$2*t_{HCLK}$		
$t_{h(A_NWE)}$	Address hold time after FSMC_NWE high	t_{HCLK}		
$t_{V(BL_NE)}$	FSMC_NE low to FSMC_BL valid	0	5	
$t_{h(BL_NWE)}$	FSMC_BL hold time after FSMC_NWE high	t_{HCLK}		
$t_{V(DATA_NADV)}$	FSMC_NADV high to data hold time	$2*t_{HCLK}$		
$t_{h(DATA_NWE)}$	Data hold time after FSMC_NWE high	t_{HCLK}		

Figure 3-18 Synchronous bus multiplexing NOR/PSRAM read waveforms

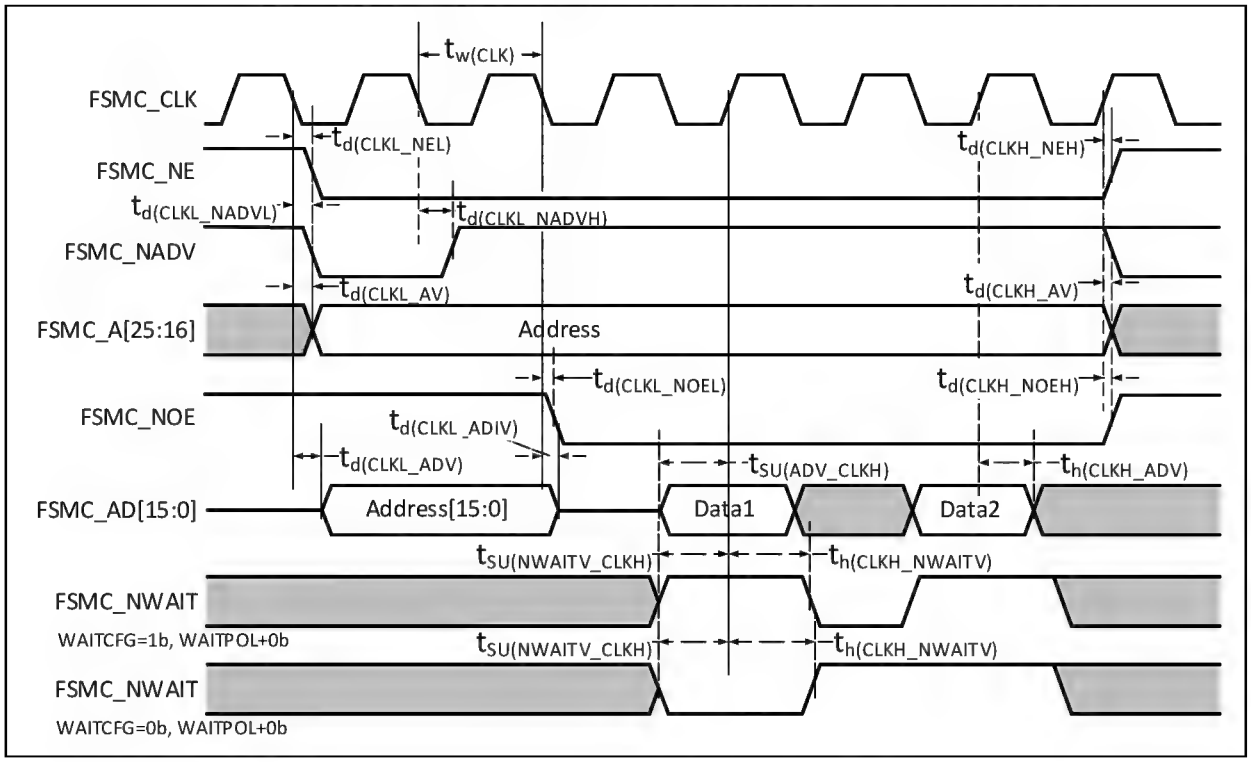

Table 3-37 Synchronous bus multiplexing NOR/PSRAM read timing

Symbol	Parameter	Min.	Max.	Unit
$t_{W(CLK)}$	FSMC_CLK period	$2*t_{HCLK}$		ns
$t_{d(CLKL_NEL)}$	FSMC_CLK low to FSMC_NE low	0	5	
$t_{d(CLKH_NEH)}$	FSMC_CLK high to FSMC_NE high	$0.5*t_{HCLK}$	$0.5*t_{HCLK}$	
$t_{d(CLKL_NADVL)}$	FSMC_CLK low to FSMC_NADV low	0	5	
$t_{d(CLKL_NADVH)}$	FSMC_CLK low to FSMC_NADV high	0	5	
$t_{d(CLKL_AV)}$	FSMC_CLK low to FSMC_Ax valid (x = 16…25)	0	5	
$t_{d(CLKH_AIV)}$	FSMC_CLK high to FSMC_Ax invalid (x = 16…25)	0	5	
$t_{d(CLKL_NOEL)}$	FSMC_CLK low to FSMC_NOE low	$2*t_{HCLK}$		
$t_{d(CLKH_NOEH)}$	FSMC_CLK high to FSMC_NOE high	t_{HCLK}		
$t_{d(CLKL_ADV)}$	FSMC_CLK low to FSMC_AD[15:0] valid	0	5	
$t_{d(CLKL_ADIV)}$	FSMC_CLK low to FSMC_AD[15:0] invalid	0	5	
$t_{SU(ADV_CLKH)}$	FSMC_AD[15:0] valid data before FSMC_CLK high	8		
$t_{h(CLKH_ADV)}$	FSMC_AD[15:0] valid data after FSMC_CLK high	8		
$t_{SU(NWAITV_CLKH)}$	FSMC_NWAIT valid before FSMC_CLK high	6		
$t_{h(CLKH_NWAITV)}$	FSMC_NWAIT valid after FSMC_CLK high	2		

Figure 3-19 Synchronous bus multiplexing PSRAM write waveforms

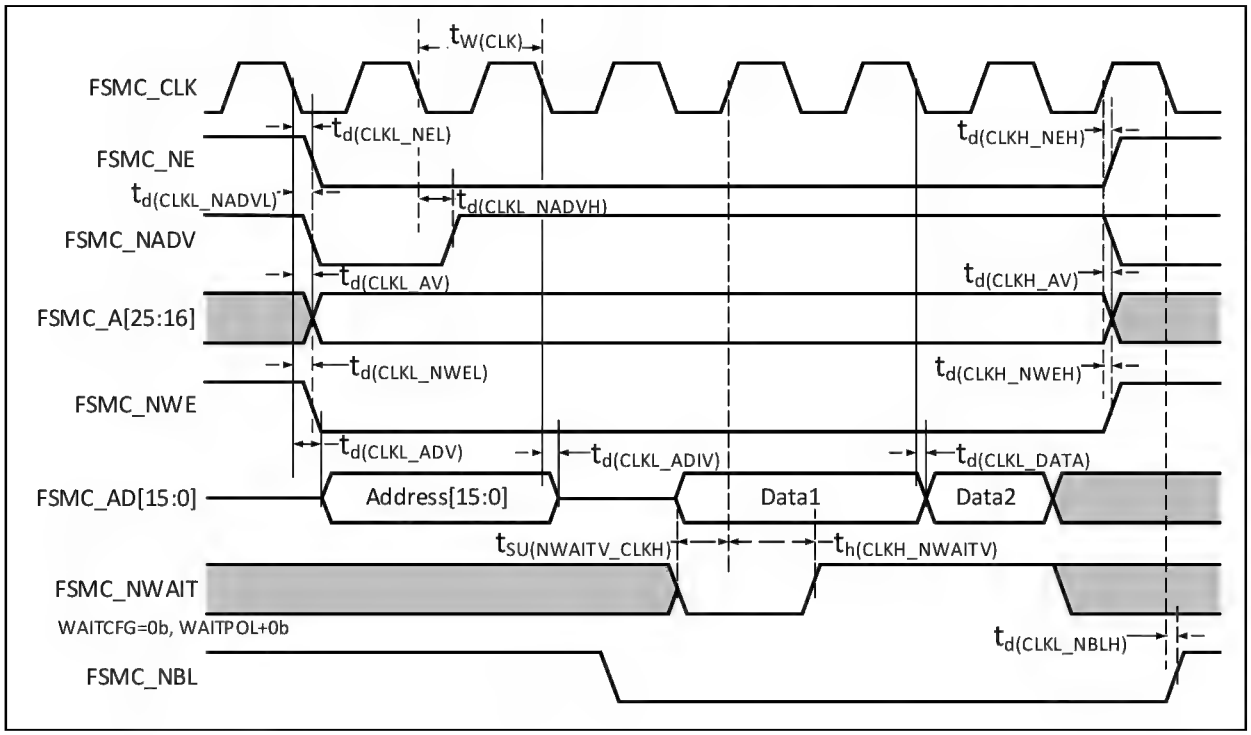

Table 3-38 Synchronous bus multiplexing PSRAM write timing

Symbol	Parameter	Min.	Max.	Unit
$t_{W(CLK)}$	FSMC_CLK period	$2*t_{HCLK}$		ns
$t_{d(CLKL_NEL)}$	FSMC_CLK low to FSMC_NE low	0	5	
$t_{d(CLKH_NEH)}$	FSMC_CLK high to FSMC_NE high	$0.5*t_{HCLK}$	$0.5*t_{HCLK}$	
$t_{d(CLKL_NADVL)}$	FSMC_CLK low to FSMC_NADV low	0	5	
$t_{d(CLKL_NADVH)}$	FSMC_CLK low to FSMC_NADV high	0	5	
$t_{d(CLKL_AV)}$	FSMC_CLK low to FSMC_Ax valid (x = 16…25)	0	5	
$t_{d(CLKH_AIV)}$	FSMC_CLK high to FSMC_Ax invalid (x = 16…25)	0	5	
$t_{d(CLKL_NWEL)}$	FSMC_CLK low to FSMC_NWE low	0		
$t_{d(CLKH_NWEH)}$	FSMC_CLK high to FSMC_NWE high	0		
$t_{d(CLKL_ADV)}$	FSMC_CLK low to FSMC_AD[15:0] valid	0	5	
$t_{d(CLKL_ADIV)}$	FSMC_CLK low to FSMC_AD[15:0] invalid	0	5	
$t_{d(CLKL_DATA)}$	FSMC_AD[15:0] valid after FSMC_CLK low	2		
$t_{SU(NWAITV_CLKH)}$	FSMC_NWAIT valid before FSMC_CLK high	6		
$t_{h(CLKH_NWAITV)}$	FSMC_NWAIT valid after FSMC_CLK high	2		
$t_{d(CLKL_NBLH)}$	FSMC_CLK low to FSMC_NBL high	2		

NAND Controller Waveforms and Timing

Test conditions: NAND operation area, 16-bit data width selected, ECC calculation circuitry enabled, 512-byte page size, other timing configured to set registers FSMC_PCR2 = 0x0002005E, FSMC_PMEM2 = 0x01020301, FSMC_PATT2 = 0x01020301.

Figure 3-20 NAND controller read operation waveform

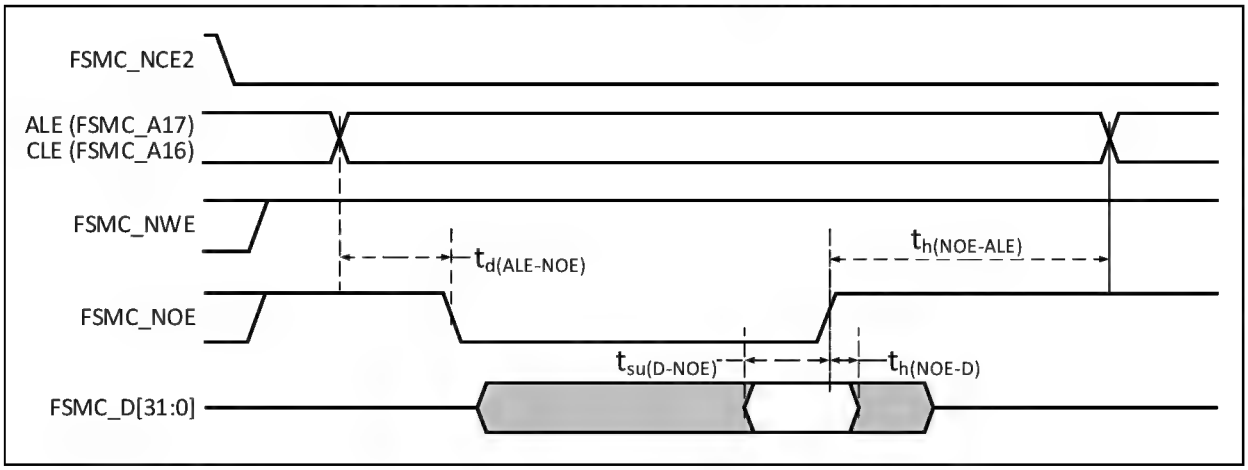

Figure 3-21 NAND controller write operation waveform

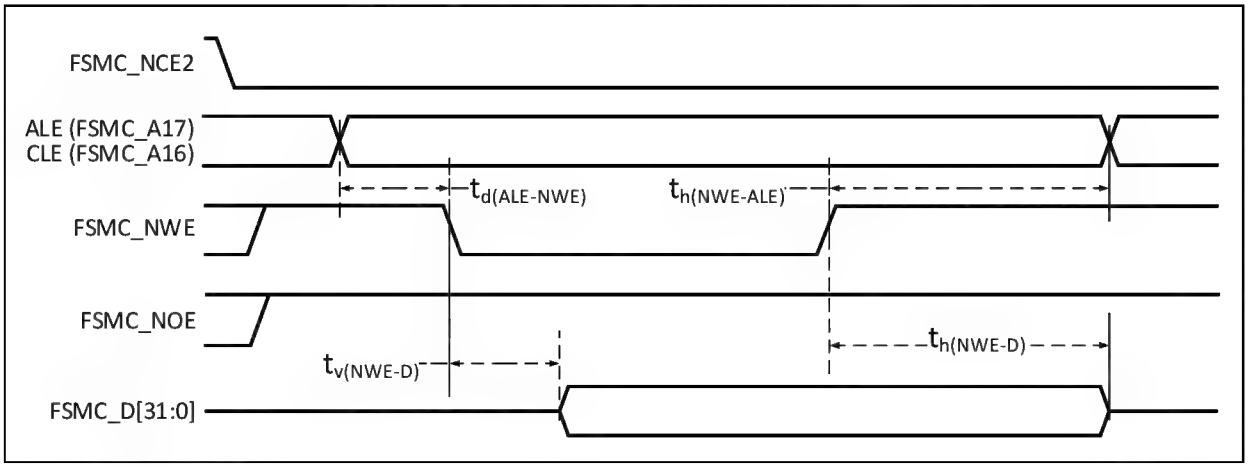

Figure 3-22 Waveforms of NAND controller read operations in general-purpose memory space

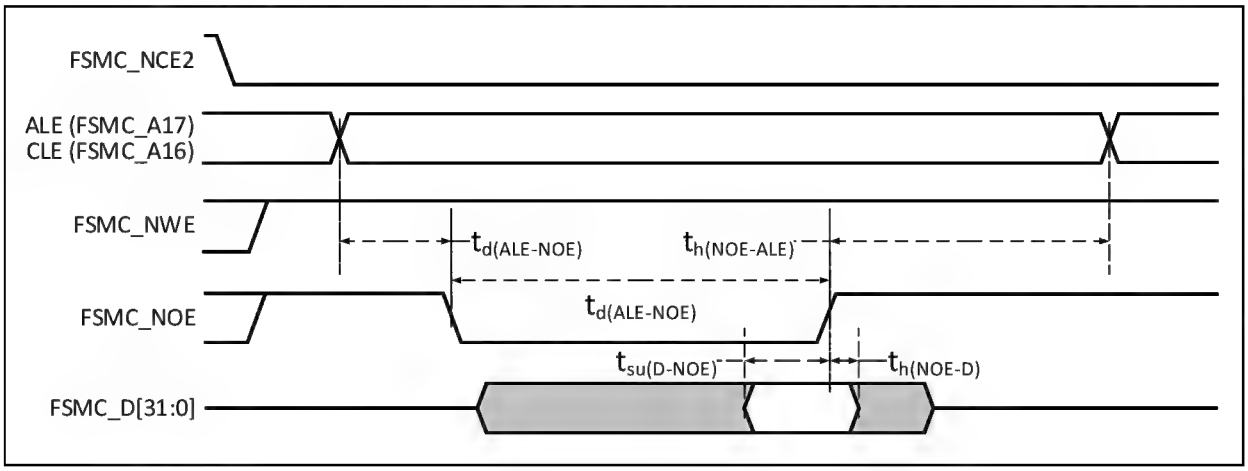

Figure 3-23 Waveforms of NAND controller write operations in general-purpose memory space

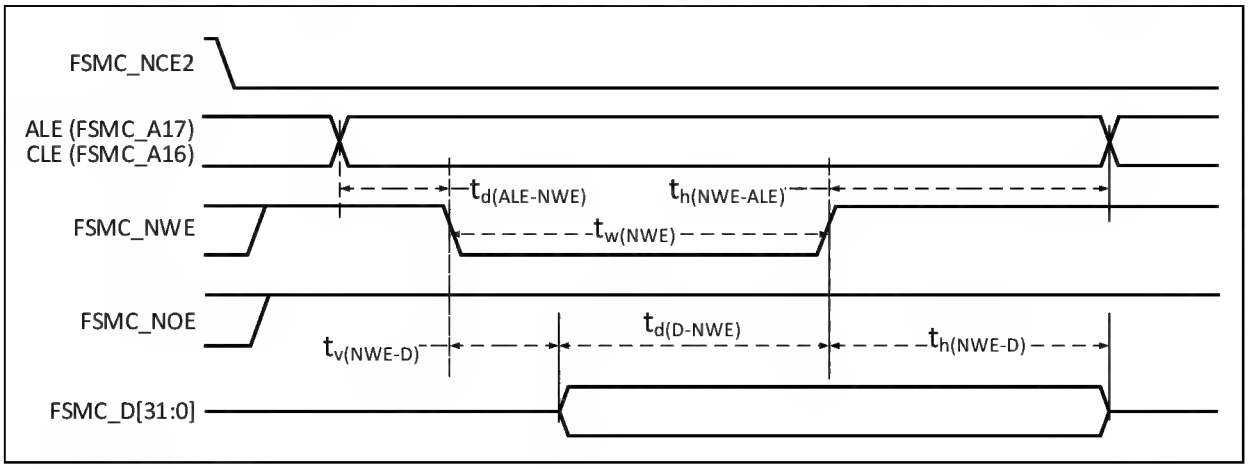

Table 3-39 Timing characteristics of NAND flash read and write cycles

Symbol	Parameter	Min.	Max.	Unit
$t_{d(D-NEW)}$	FSMC_NWE high before to FSMC_D[31:0] data valid	$4*t_{HCLK}$		ns
$t_{w(NOE)}$	FSMC_NOE low time	$4*t_{HCLK}$		
$t_{su(D-NOE)}$	FSMC_NOE high before to FSMC_D[31:0] data valid	20		
$t_{h(NOE-D)}$	FSMC_NOE high followed by to FSMC_D[31:0] data valid	15		
$t_{w(NWE)}$	FSMC_NWE low time	$4*t_{HCLK}$		
$t_{v(NWE-D)}$	FSMC_NWE low to FSMC_D[31:0] data valid	0		
$t_{h(NWE-D)}$	FSMC_NWE high to FSMC_D[31:0] data invalid	$2*t_{HCLK}$		
$t_{d(ALE-NWE)}$	FSMC_NWE low before to FSMC_ALE valid	$2*t_{HCLK}$		
$t_{h(NWE-ALE)}$	FSMC_NWE high to FSMC_ALE invalid	$2*t_{HCLK}$		
$t_{d(ALE-NOE)}$	FSMC_NOE low before to FSMC_ALE valid	$2*t_{HCLK}$		
$t_{h(NOE-ALE)}$	FSMC_NOE high to FSMC_ALE invalid	$4*t_{HCLK}$		

3.3.26 SDRAM Characteristics

Figure 3-24 SDRAM read operation waveform (CL = 1)

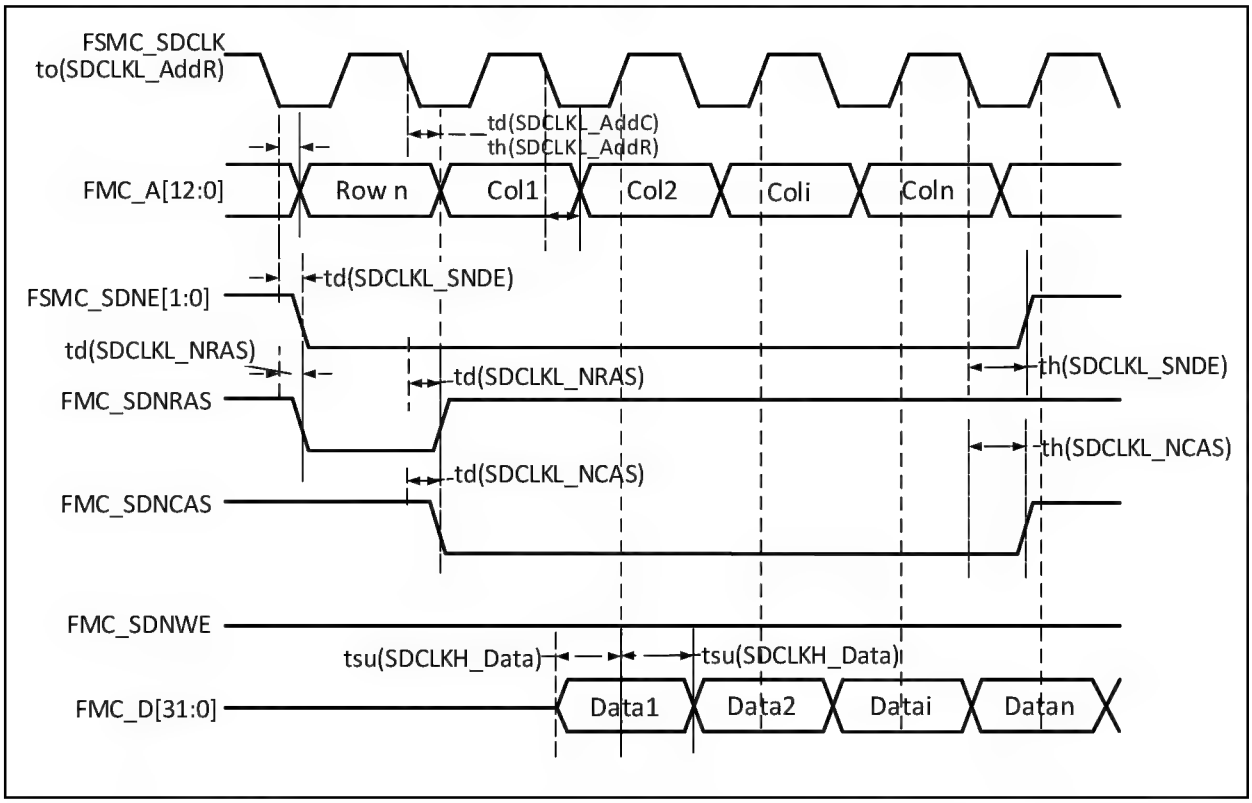

Table 3-40 SDRAM read operation timing

Symbol	Parameter	Min.	Max.	Unit
$t_{W(SDCLK)}$	FMC_SDCLK period	t_{HCLK}-0.5	t_{HCLK}+0.5	ns
$t_{SU(SDCLKH_DATA)}$	Data input setup time	3.5		
$t_{h(SDCLKH_DATA)}$	Data input holding time	1.5		
$t_{d(SDCLKL_ADD)}$	Address valid time		4	
$t_{d(SDCLKL_SDNE)}$	Chip selection valid time		1	
$t_{h(SDCLKL_SDNE)}$	Chip selection holding time	0		
$t_{d(SDCLKL_SDNRAS)}$	SDNRAS valid time		1	
$t_{h(SDCLKL_SDNRAS)}$	SDNRAS holding time	0		
$t_{d(SDCLKL_SDNCAS)}$	SDNCAS valid time		1	
$t_{h(SDCLKL_SDNCAS)}$	SDNCAS holding time	0		

Table 3-41 LPSDR SDRAM read operation timing

Symbol	Parameter	Min.	Max.	Unit
$t_{W(SDCLK)}$	FMC_SDCLK period	t_{HCLK}-0.5	t_{HCLK}+0.5	ns
$t_{SU(SDCLKH_DATA)}$	Data input setup time	3.0		
$t_{h(SDCLKH_DATA)}$	Data input holding time	1.5		
$t_{d(SDCLKL_ADD)}$	Address valid time		3.5	

$t_{d(SDCLKL_SDNE)}$	Chip selection valid time		1	
$t_{h(SDCLKL_SDNE)}$	Chip selection holding time	0		
$t_{d(SDCLKL_SDNRAS)}$	SDNRAS valid time		1	
$t_{h(SDCLKL_SDNRAS)}$	SDNRAS holding time	0		
$t_{d(SDCLKL_SDNCAS)}$	SDNCAS valid time		1	
$t_{h(SDCLKL_SDNCAS)}$	SDNCAS holding time	0		

Figure 3-25 SDRAM write operation waveform

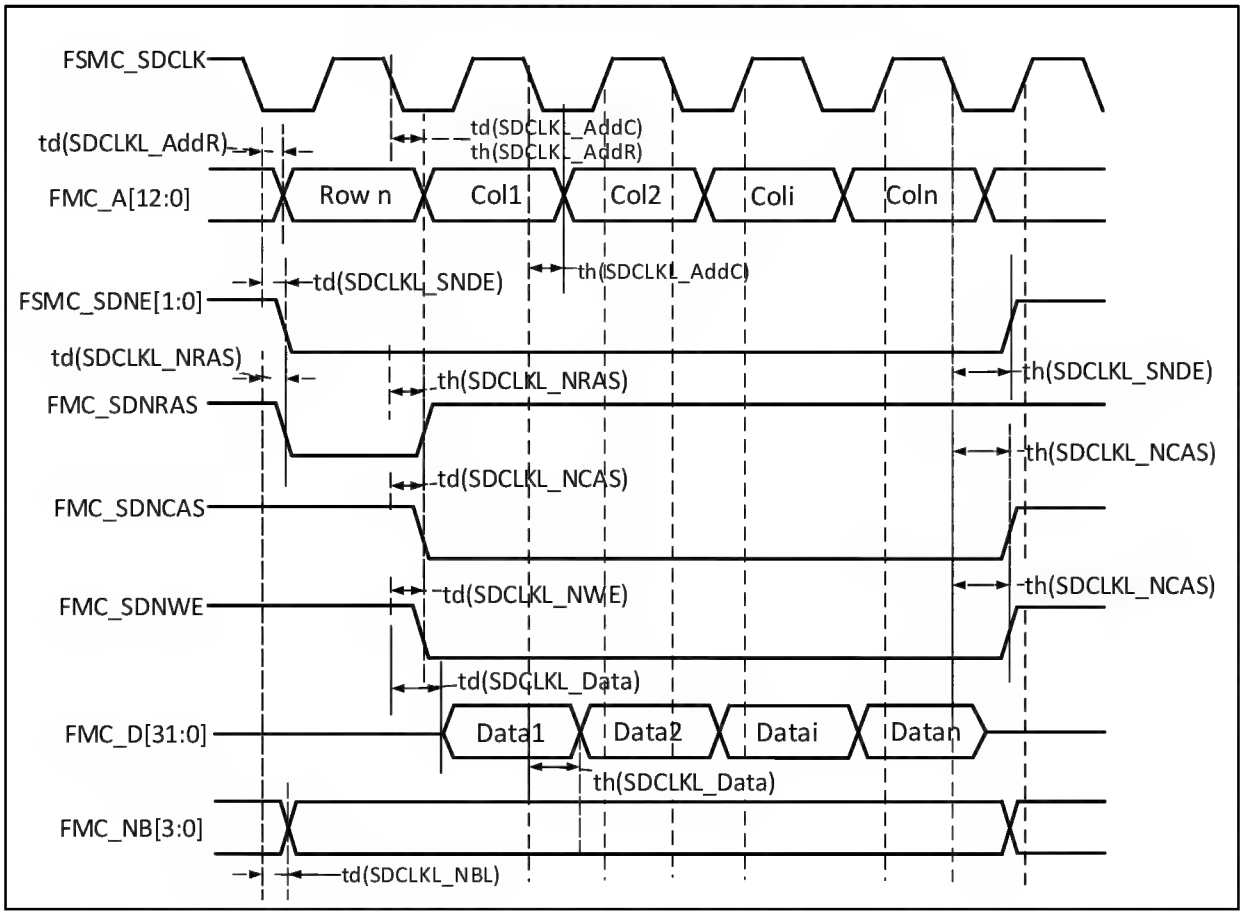

Table 3-42 SDRAM write operation timing

Symbol	Parameter	Min.	Max.	Unit
$t_{W(SDCLK)}$	FMC_SDCLK period	t_{HCLK}-0.5	t_{HCLK}+0.5	ns
$t_{SU(SDCLKL_DATA)}$	Data output valid time		2	
$t_{h(SDCLKL_DATA)}$	Data output holding time	0.5		
$t_{d(SDCLKL_ADD)}$	Address valid time		4	
$t_{d(SDCLKL_SDNWE)}$	SDNWE valid time		1	
$t_{h(SDCLKL_SDNWE)}$	SDNWE holding time	0		
$t_{d(SDCLKL_SDNE)}$	Chip selection valid time		1	
$t_{h(SDCLKL_SDNE)}$	Chip selection holding time	0		
$t_{d(SDCLKL_SDNRAS)}$	SDNRAS valid time		1	
$t_{h(SDCLKL_SDNRAS)}$	SDNRAS holding time	0		

$t_{d(SDCLKL_SDNCAS)}$	SDNCAS valid time		1	
$t_{h(SDCLKL_SDNCAS)}$	SDNCAS holding time	0		

Table 3-43 LPSDR SDRAM write operation timing

Symbol	Parameter	Min.	Max.	Unit
$t_{W(SDCLK)}$	FMC_SDCLK period	t_{HCLK}-0.5	t_{HCLK}+0.5	ns
$t_{SU(SDCLKL_DATA)}$	Data output valid time		4	
$t_{h(SDCLKL_DATA)}$	Data output holding time	0		
$t_{d(SDCLKL_ADD)}$	Address valid time		3.5	
$t_{d(SDCLKL_SDNWE)}$	SDNWE valid time		1	
$t_{h(SDCLKL_SDNWE)}$	SDNWE holding time	0		
$t_{d(SDCLKL_SDNE)}$	Chip selection valid time		1	
$t_{h(SDCLKL_SDNE)}$	Chip selection holding time	0		
$t_{d(SDCLKL_SDNRAS)}$	SDNRAS valid time		1	
$t_{h(SDCLKL_SDNRAS)}$	SDNRAS holding time	0		
$t_{d(SDCLKL_SDNCAS)}$	SDNCAS valid time		1	
$t_{h(SDCLKL_SDNCAS)}$	SDNCAS holding time	0		

3.3.27 DVP Interface Characteristics

Figure 3-26 DVP timing waveform

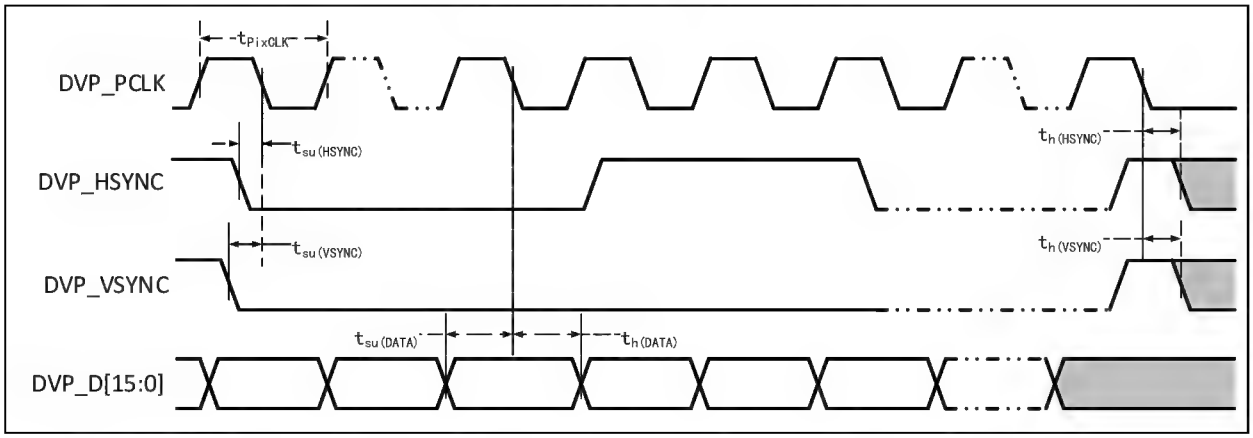

Table 3-44 DVP interface characteristics

Symbol	Parameter	Min.	Max.	Unit
f_{PixCLK}/t_{PixCLK}	Pixel clock input frequency		150	MHz
$Duty_{(PixCLK)}$	Duty cycle of pixel clock	15		%
$t_{su(DATA)}$	Data setup time	2.5		ns
$t_{h(DATA)}$	Data holding time	1		
$t_{su(HSYNC)}/t_{su(VSYNC)}$	HSYNC/VSYNC signal input setup time	2.5		
$t_{h(HSYNC)}/t_{h(VSYNC)}$	HSYNC/VSYNC signal input holding time	1		

3.3.28 DVP Interface Characteristics

Figure 3-27 ETH-SMI timing waveforms

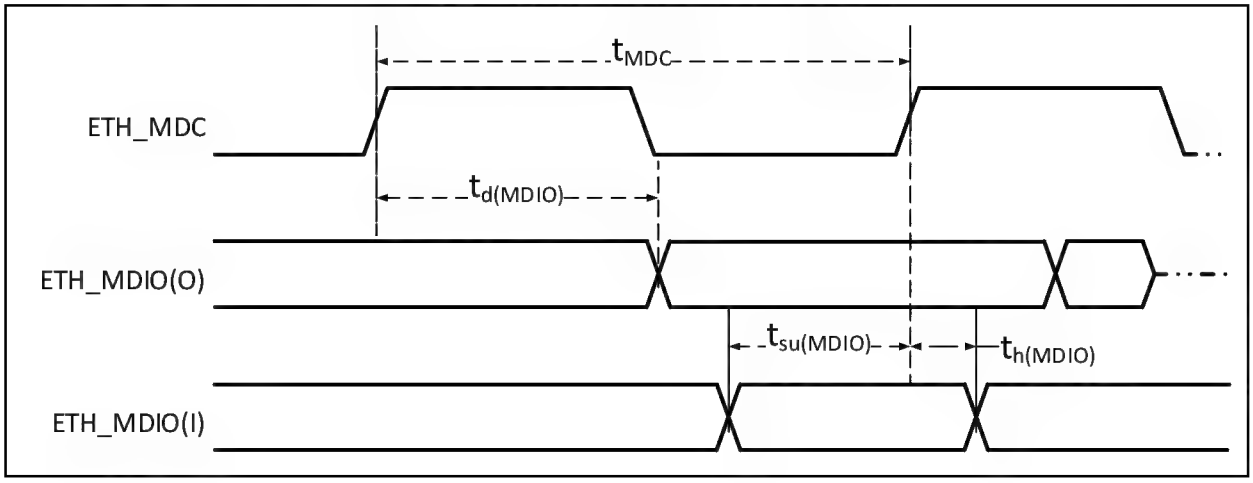

Table 3-45 SMI signaling characteristics for Ethernet MACs

Symbol	Parameter & Description	Min.	Typ.	Max.	Unit
f_{MDC}/t_{MDC}	MDC clock frequency			2.5	MHz
$t_{d(MDIO)}$	Valid time for MDIO write data	0		300	ns
$t_{su(MDIO)}$	Read data setup time	10			
$t_{h(MDIO)}$	Read data holding time	10			

Figure 3-28 ETH-RGMII signal timing waveforms

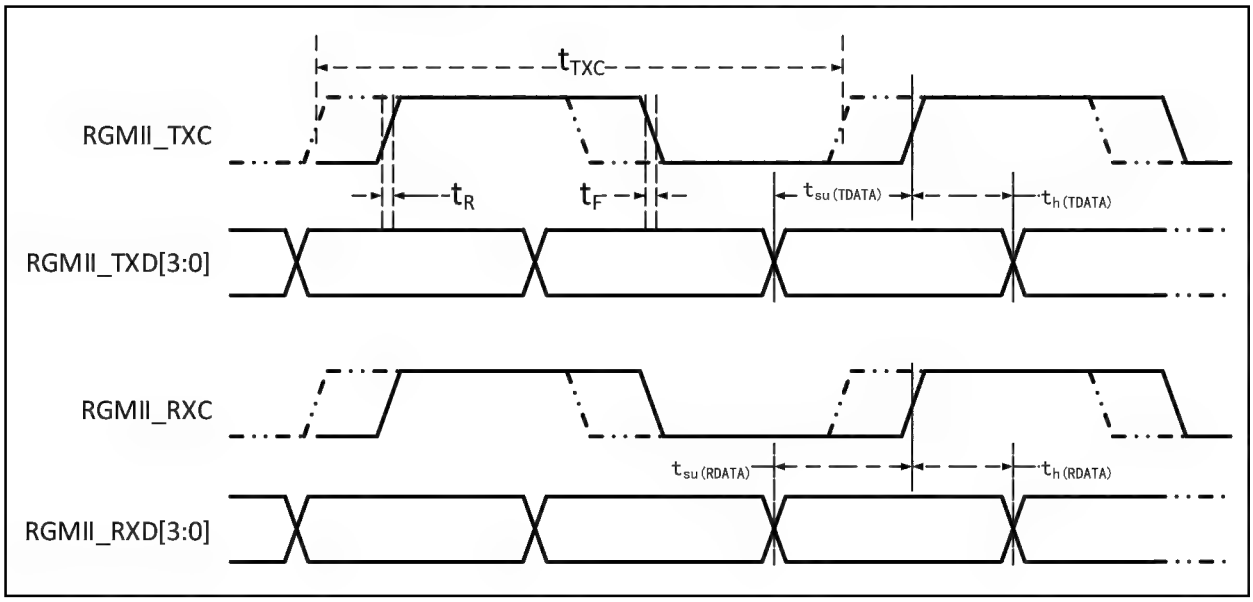

Table 3-46 RGMII signaling characteristics for Ethernet MACs

Symbol	Parameter & Description	Min.	Typ.	Max.	Unit
f_{TXC}/t_{TXC}	TXC/RXC clock frequency	7.2	8	8.8	ns

t_R	TXC/RXC rising time			2.0	
t_F	TXC/RXC falling time			2.0	
$t_{su(TDATA)}$	Send data setup time	1.2	2.0		
$t_{h(TDATA)}$	Send data holding time	1.2	2.0		
$t_{su(RDATA)}$	Input data setup time	1.2	2.0		
$t_{h(RDATA)}$	Input data holding time	1.2	2.0		

3.3.29 12-bit ADC Characteristics

Table 3-47 ADC characteristics

Symbol	Parameter	Condition	Min.	Typ.	Max.	Unit
V_{DD33A}	Supply voltage	$f_S < 2MHz$	2.7		3.6	V
		$f_S \geq 2MHz$	3		3.6	V
V_{REFP}(2)	Positive reference voltage	$V_{REFP} \leq V_{DD33A}$	2.4	3.3	3.6	V
I_{DD33A}	ADC supply current (excluding buffer)	ADC_LP = 0		1.42		mA
		ADC_LP = 1		0.37		mA
I_{BUF}	ADC buffer own current	ADC_LP = 0		0.76		mA
		ADC_LP = 1		0.19		mA
f_{ADC}	ADC clock frequency			14	80	MHz
f_S	Sampling rate		0.06		5	MHz
f_{TRIG}	External trigger frequency	f_{ADC} = 14MHz			875	kHz
					16	$1/f_{ADC}$
		f_{ADC} = 80MHz			4.4	MHz
					18	$1/f_{ADC}$
V_{AIN}	Conversion voltage range	$V_{REFP} \geq V_{DDIO}$	0		V_{DDIO}	V
		$V_{REFP} < V_{DDIO}$	0		V_{REFP}	V
R_{AIN}	External input impedance				50	kΩ
R_{ADC}	Sampling switch resistance			0.6	1.5	kΩ
C_{ADC}	Internal sampling and holding capacitance			4.5		pF
t_{CAL}	Calibration time	f_{ADC} = 14MHz	2			us
t_{Iat}	Injection-triggered conversion delay	f_{ADC} = 14MHz			0.143	us
		f_{ADC} = 80MHz			0.025	us
					2	$1/f_{ADC}$
t_{Iatr}	Conventional trigger conversion delay	f_{ADC} = 14MHz			0.143	us
		f_{ADC} = 80MHz			0.025	us
					2	$1/f_{ADC}$
t_s	Sampling time	f_{ADC} = 14MHz	0.107		17.11	us
			1.5		239.5	$1/f_{ADC}$
		f_{ADC} = 80MHz	0.037		2.49	us
			3.5		239.5	$1/f_{ADC}$
t_{STAB}	Power-on time				1	us
t_{CONV}	Total conversion time (including sampling time)	f_{ADC} = 14MHz	1		18	us
			14		252	$1/f_{ADC}$

		f_{ADC} = 80MHz	0.2		3.15	us
			16		252	$1/f_{ADC}$

Note: 1. All of the above are guaranteed by design parameters.

2. V_{REFP} external capacitance should be as close as possible, otherwise it will affect the ADC performance.

Formula: Maximum R_{AIN}

$$R_{AIN} < \frac{T_S}{f_{ADC} \times C_{ADC} \times \ln 2^{N+2}} - R_{ADC}$$

The above formula is used to determine the maximum external impedance such that the error can be less than 1/4 LSB. where N=12 (indicating 12-bit resolution).

Table 3-48 Maximum R_{AIN} when f_{ADC} = 14MHz

T_S(Period)	t_S(us)	最大 R_{AIN}(kΩ)
1.5	0.11	1.0
3.5	0.25	4.0
7.5	0.54	10.9
13.5	0.96	20.5
28.5	2.04	44.9
41.5	2.96	66.3

Table 3-49 ADC error (f_{ADC} = 14MHz, ADC_LP = 1)

Symbol	Parameter	Condition	Min.	Typ.	Max.	Unit
EO	Offset error	R_{AIN} < 10kΩ, V_{DD33A} = 3.3V		±2	±5	LSB
ED	Differential nonlinear error			±1	±4	
EL	Integral nonlinear error			±2	±4	

Note: The above are guaranteed design parameters.

Table 3-50 ADC error (f_{ADC} = 80MHz, ADC_LP = 0)

Symbol	Parameter	Condition	Min.	Typ.	Max.	Unit
EO	Offset error	R_{AIN} < 2kΩ, V_{DD33A} = 3.3V		±3	±7	LSB
ED	Differential nonlinear error			±2	±5	
EL	Integral nonlinear error			±3	±5	

Note: The above are guaranteed design parameters.

Cp indicates the parasitic capacitance on the PCB and pads (About 5pF), which may be related to the quality of the pads and PCB layout. Larger values of Cp will reduce the conversion accuracy and the solution is to reduce the f_{ADC}

Figure 3-29 ADC typical connection diagram

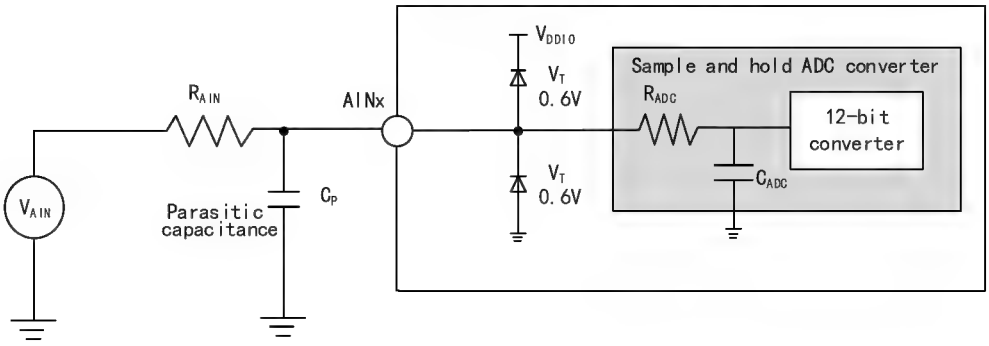

Figure 3-30 Analog power supply and decoupling circuit reference

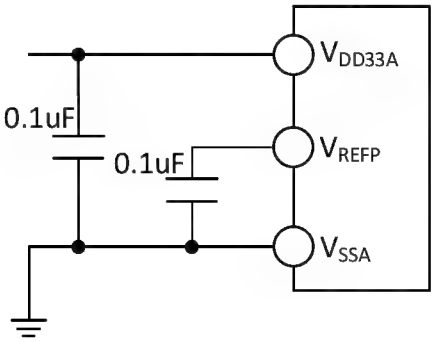

3.3.30 10-bit HSADC Characteristics

Table 3-51 HSADC characteristics

Symbol	Parameter	Condition	Min.	Typ.	Max.	Unit
V_{DD33A}	Supply voltage		3.0	3.3	3.6	V
V_{REFP}(2)	Positive reference voltage	$V_{REFP} \leq V_{DD33A}$	2.4	3.3	3.6	V
V_{DDIO}	I/O pin voltage when using HSADC		V_{REFP}			V
I_{DDA}	Supply current			1.1		mA
I_{DDIO}	ADC I/O pin current			1.8		mA
f_{HSADC}	ADC clock frequency			100		MHz
f_S	Sampling rate			20		MHz
V_{AIN}	Conversion voltage range	$V_{REFP} \geq V_{DDIO}$	0		V_{DDIO}	V
		$V_{REFP} < V_{DDIO}$	0		V_{REFP}	V
R_{AIN}	External input impedance				0.4	kΩ
R_{HSADC}	Sampling switch resistance			0.1	0.25	kΩ
C_{HSADC}	Internal sampling and holding capacitance			1.1		pF
t_{CAL}	Calibration time			1		us
t_s	Sampling time	f_{HSADC} = 100MHz		10		ns
				1		$1/f_{HSADC}$

t_{STAB}	Power-on time				1	us
t_{CONV}	Total conversion time (including sampling time)	f_{HSADC} = 100MHz		50		ns
				5		$1/f_{HSADC}$

Note: 1. All of the above are guaranteed by design parameters.

2. V_{REFP} external capacitance should be as close as possible, otherwise it will affect the HSADC performance.

Formula: Maximum R_{AIN}

$$R_{AIN} < \frac{T_S}{f_{HSADC} \times C_{HSADC} \times \ln 2^{N+2}} - R_{HSADC}$$

The above formula is used to determine the maximum external impedance such that the error can be less than 1/4 LSB. where N=10 (indicating 10-bit resolution).

Table 3-52 HSADC error

Symbol	Parameter	Condition	Min.	Typ.	Max.	Unit
EO	Offset error	R_{AIN} < 0.4kΩ, V_{DD33A} = 3.3V		±4	±9	LSB
ED	Differential nonlinear error			±2	±4	
EL	Integral nonlinear error			±3	±4	

Note: The above are guaranteed design parameters.

Cp indicates the parasitic capacitance on the PCB and pads (About 5pF), which may be related to the quality of the pads and PCB layout. Larger values of Cp will reduce the conversion accuracy and the solution is to reduce the f_{ADC}.

Figure 3-31 HSADC typical connection diagram

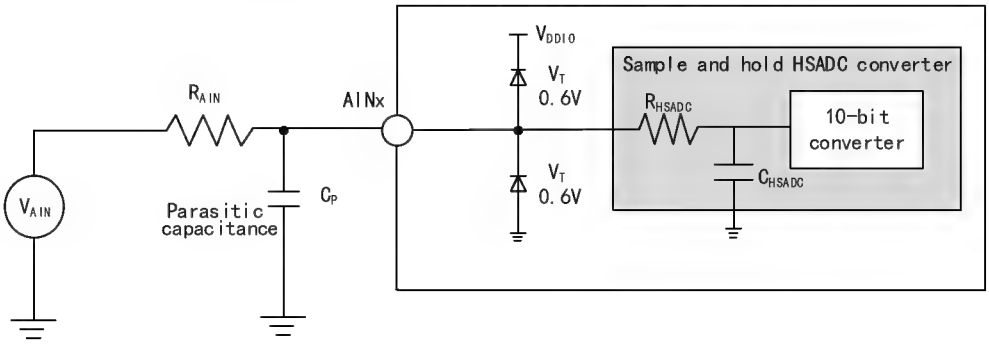

Figure 3-32 Analog power supply and decoupling circuit reference

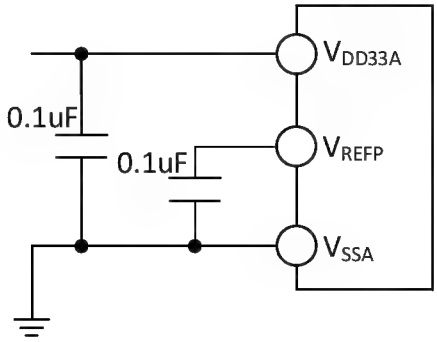

3.3.31 DAC Characteristics

Table 3-53 DAC characteristics

Symbol	Parameter	Condition	Min.	Typ.	Max.	Unit
V_{DD33A}	Supply voltage		2.4	3.3	3.6	V
V_{REFP}	Positive reference voltage	$V_{REFP} \leq V_{DD33A}$	2.4	3.3	3.6	V
R_L(1)	Load resistance when the buffer is open		5			kΩ
C_L(1)	Load capacitance when buffer is open				50	pF
V_{OUT_MIN}(1)	Buffer on, 12-bit DAC conversion		0		8	mV
V_{OUT_MAX}(1)		V_{REFP} = 3.3V	3.29		3.3	V
V_{OUT_MIN}(1)	Buffer off, 12-bit DAC conversion		0		3	mV
V_{OUT_MAX}(1)		V_{REFP} = 3.3V	3.295		3.3	V
I_{VREFP}	No load, input value 0x800			58		uA
	No load, when V_{REFP} = 3.6V, the input value is 0xF1C.			194		
	No load, when VREFP = 3.6V, the input value is 0x555 (worst)			331		
I_{DDA}	Buffer opened without load, input value 0x800			170		uA
	Buffer open without load, V_{REFP} = 3.6V, input value 0xF1C			150		
	Buffer open without load, V_{REFP} = 3.6V, input value 0x555 (worst)			170		
DNL	Differential nonlinear error			±2		LSB
INL	Integral nonlinear error	After offset error and gain error correction		±4		LSB
Lose balance	Offset error			±3	±12	mV
		V_{REFP} = 3.6V			±10	LSB
Gain error		DAC configured as 12-bit		±0.4		%
Amplifier gain(1)	Amplifier gain with open loop	5kΩ load (max.)	80	85		dB
$t_{SETTLING}$	The maximum frequency of the correct DAC_OUT is obtained when the input code is a small change (from the value i	$C_{LOAD} \leq$ 50pF $R_{LOAD} \geq$ 5kΩ		3	4	us

	to i+1 LSB)					
Update rate	When the input code changes slightly (from the value I to i+1LSB), the maximum frequency of the correct DAC_OUT is obtained.	$C_{LOAD} \leq 50pF$ $R_{LOAD} \geq 5k\Omega$			1	MS/s
PSRR+(1)	Power supply rejection ratio (relative to V_{DD33A}) (static DC measurement)	Without R_{LOAD}, $C_{LOAD} \leq 50pF$		-100	-75	dB

Note: 1. Design parameters are guaranteed;

3.3.32 OPA Characteristics

Table 3-54-1 OPA characteristics

Symbol	Parameter	Condition	Min.	Typ.	Max.	Unit
V_{DD33A}	Supply voltage	Recommended not less than 2V	1.8	3.3	3.6	V
V_{CMIR}	Common-mode input voltage		0		V_{DD33A}	V
$V_{IOFFSET}$	Input offset voltage			±0.2	±0.8	mV
V_{IN_OUT}	Voltage range for channel inputs and outputs	For PB0~PB1, PE8~PE9, PE11~PE12, PC2~PC3 pins			V_{IO18}	V
		Other OPA input/output channel pins			V_{DDIO}	V
I_{LOAD}	Drive current	R_{LOAD} = 4kΩ			900	uA
I_{LOAD_PGA}	PGA mode drive current				500	uA
$I_{DDOPAMP}$	Current consumption	No load, static mode		200		uA
CMRR(1)	Common mode rejection ratio	@1kHz		96		dB
PSRR(1)	Power supply rejection ratio	@1kHz		82		dB
Av(1)	Open loop voltage gain	C_{LOAD} = 5pF		110		dB
G_{BW}(1)	Open loop gain	C_{LOAD} = 5pF		16		MHz
P_M(1)	Unit gain bandwidth	C_{LOAD} = 5pF		75		°
S_R(1)	Phase margin	C_{LOAD} = 5pF		7		V/us
t_{WAKUP}(1)	Setup time from shutdown to wake up, 0.1%	Input V_{DD33A}/2, C_{LOAD} = 50pF, R_{LOAD} = 4kΩ			1	us
R_{LOAD}	Resistive load		4			kΩ
C_{LOAD}	Capacitive load				50	pF
V_{OHSAT}(2)	High saturation output voltage	R_{LOAD} = 4kΩ	V_{DD33A} -160			mV
		R_{LOAD} = 20kΩ	V_{DD33A} -35			mV
V_{OLSAT}(2)	Low saturation output voltage	R_{LOAD} = 4kΩ			3	mV
		R_{LOAD} = 4KΩ, pull-up			160	mV

		R_{LOAD} = 20kΩ			3	mV
		R_{LOAD} = 20kΩ, pull-up			35	mV
PGA Gain(1)	PGADIFx = 0, in-phase PGA gain error	Gain = 8, V_{CMIR} < (V_{DD33A}/7)	-1		1	%
		Gain = 16, V_{CMIR} < (V_{DD33A}/15)	-1		1	%
		Gain = 32, V_{CMIR} < (V_{DD33A}/31)	-1		1	%
		Gain = 64, V_{CMIR} < (V_{DD33A}/63)	-1.5		1.5	%
	PGADIFx = 1, in-phase PGA gain error	Gain = 8	-2		2	%
		Gain = 16	-2		2	%
		Gain = 32	-2		2	%
		Gain = 64	-2.5		2.5	%
Delta R	Absolute change in resistance		-15		15	%
eN(1)	Equivalent input voltage noise	R_{LOAD} = 4kΩ@1kHz		100		nV/ sqrt(Hz)
		R_{LOAD} = 20kΩ@1kHz		60		

Note: 1. Design parameters are guaranteed;

2. Load current will limit saturated output voltage.

Table 3-54-2 OPA characteristics (High-speed mode)

Symbol	Parameter	Condition	Min.	Typ.	Max.	Unit
V_{DD33A}	Supply voltage	Recommended not less than 2V	1.8	3.3	3.6	V
V_{CMIR}	Common-mode input voltage		0		V_{DD33A}	V
$V_{IOFFSET}$	Input offset voltage			±3	±12	mV
V_{IN_OUT}	Voltage range for channel inputs and outputs	For PB0~PB1, PE8~PE9, PE11~PE12, PC2~PC3 pins			V_{IO18}	V
		Other OPA input/output channel pins			V_{DDIO}	V
I_{LOAD}	Drive current	R_{LOAD} = 4kΩ			900	uA
I_{LOAD_PGA}	PGA mode drive current				500	uA
$I_{DDOPAMP}$	Current consumption	No load, static mode		450		uA
CMRR(1)	Common mode rejection ratio	@1kHz		96		dB
PSRR(1)	Power supply rejection ratio	@1kHz		82		dB
Av(1)	Open loop voltage gain	C_{LOAD} = 5pF		110		dB
G_{BW}(1)	Open loop gain	C_{LOAD} = 5pF		28		MHz

P_M(1)	Unit gain bandwidth	C_{LOAD} = 5pF		80		°
S_R(1)	Phase margin	C_{LOAD} = 5pF		25		V/us
t_{WAKUP}(1)	Setup time from shutdown to wake up, 0.1%	Input V_{DD33A}/2, C_{LOAD} = 50pF, R_{LOAD} = 4kΩ			1	us
R_{LOAD}	Resistive load		4			kΩ
C_{LOAD}	Capacitive load				50	pF
V_{OHSAT}(2)	High saturation output voltage	R_{LOAD} = 4kΩ	V_{DD33A}-160			mV
		R_{LOAD} = 20kΩ	V_{DD33A}-35			mV
V_{OLSAT}(2)	Low saturation output voltage	R_{LOAD} = 4kΩ			3	mV
		R_{LOAD} = 4KΩ, pull up			160	mV
		R_{LOAD} = 20kΩ			3	mV
		R_{LOAD} = 20kΩ, pull up			35	mV
PGA Gain(1)	Internal in-phase PGA gain error	Gain = 8, V_{CMIR} < (V_{DD33A}/7)	-1		1	%
		Gain = 16, V_{CMIR} < (V_{DD33A}/15)	-1		1	%
		Gain = 32, V_{CMIR} < (V_{DD33A}/31)	-1		1	%
		Gain = 64, V_{CMIR} < (V_{DD33A}/63)	-1.5		1.5	%
	Differential PGA gain error	Gain = 8	-2		2	%
		Gain = 16	-2		2	%
		Gain = 32	-2		2	%
		Gain = 64	-2.5		2.5	%
Delta R	Absolute change in resistance		-15		15	%
eN(1)	Equivalent input voltage noise	R_{LOAD} = 4kΩ@1kHz		100		nV/ sqrt(Hz)
		R_{LOAD} = 20kΩ@1kHz		60		

Note: 1. Design parameters are guaranteed;

2. Load current will limit saturated output voltage.

3.3.33 CMP Characteristics

Table 3-55 CMP characteristics

Symbol	Parameter	Condition	Min.	Typ.	Max.	Unit
V_{DD33A}	Supply voltage	Recommended not less than 2V	1.8	3.3	3.6	V
V_{CMIR}	Common mode input voltage		0		V_{DD33A}	V
$V_{IOFFSET}$	Input offset voltage			±3	±12	mV
V_{IN_OUT}	Voltage range for channel inputs and outputs	For PB0~PB1 pin			V_{IO18}	V
		Other CMP input and output channel pins			V_{DDIO}	V

$I_{DDOPAMP}$	Current consumption			40		uA
V_{hys}(1)	Hysteresis voltage	HYPSEL = 00		0		mV
		HYPSEL = 01		10		
		HYPSEL = 10		20		
		HYPSEL = 11		30		
t_D(1)	Comparator delay, V_{INP} from (V_{INN}-100mV) to (V_{INN}+100mV) change	$0 \leq V_{INN} \leq V_{DD33A}$		20		ns

Note: 1. Design parameters are guaranteed;

3.3.34 Temperature Sensor Characteristics

Table 3-56 TS characteristics

Symbol	Parameter	Condition	Min.	Typ.	Max.	Unit
R_{TS}	Temperature sensor measuring range		-40		85	°C
A_{TSC}	Measurement errors in temperature sensors			±12		°C
Avg_Slope	Average slope (negative temperature coefficient)		3.8	4.3	4.8	mV/°C
V_{25}	Voltage at 25°C		1.34	1.40	1.46	V
T_{S_temp}	ADC sampling time when reading temperature	f_{ADC} = 14MHz			17.1	us

Chapter 4 Package and Ordering Information

Packages

Package Form	Body Size	Pin Pitch		Package Description	Order Model
QFN128	12.3*12.3mm	0.35mm	13.8mil	Quad Flat No-Lead Package	CH32H417QEU6
QFN88	10*10mm	0.4mm	15.7mil	Quad Flat No-Lead Package	CH32H417MEU6
QFN68	8*8mm	0.4mm	15.7mil	Quad Flat No-Lead Package	CH32H417WEU6
QFN60X6	6*6mm	0.35mm	13.8mil	Quad Flat No-Lead Package	CH32H416RDU6
QFN60X6	6*6mm	0.35mm	13.8mil	Quad Flat No-Lead Package	CH32H415REU6

Note: All dimensions are in millimeters. The pin center spacing values are nominal values, with no error. Other than that, the dimensional error is not greater than the greater of ±0.2mm or 10%.

4.1 QFN128 package

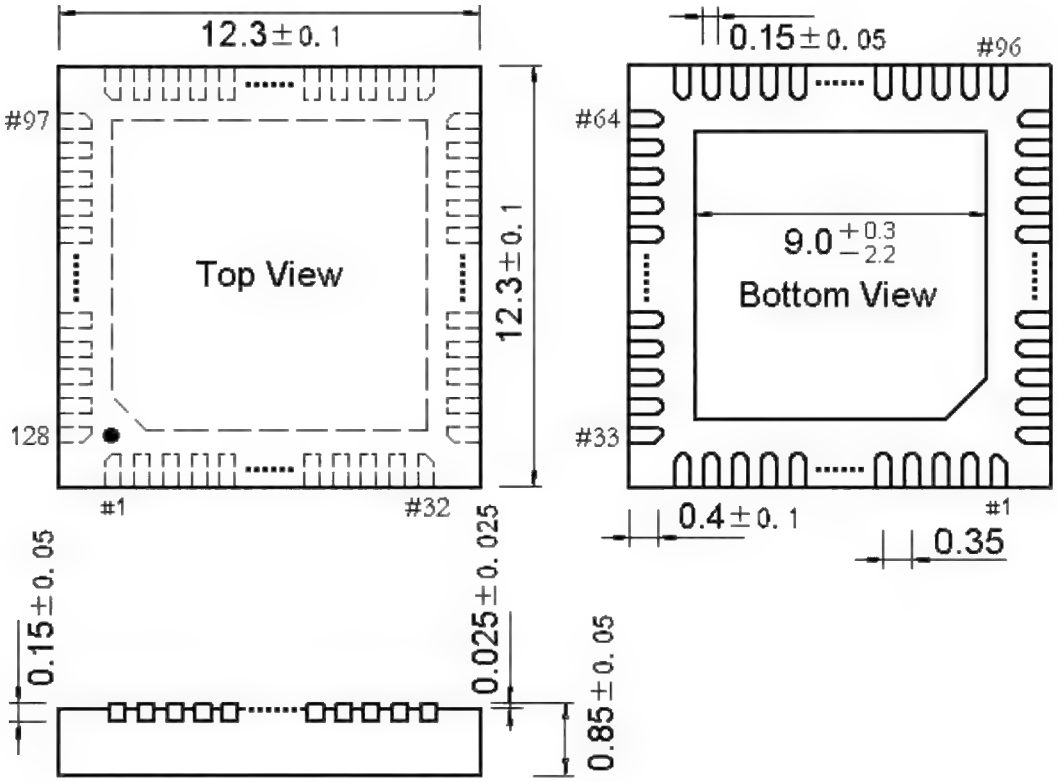

4.2 QFN88 package

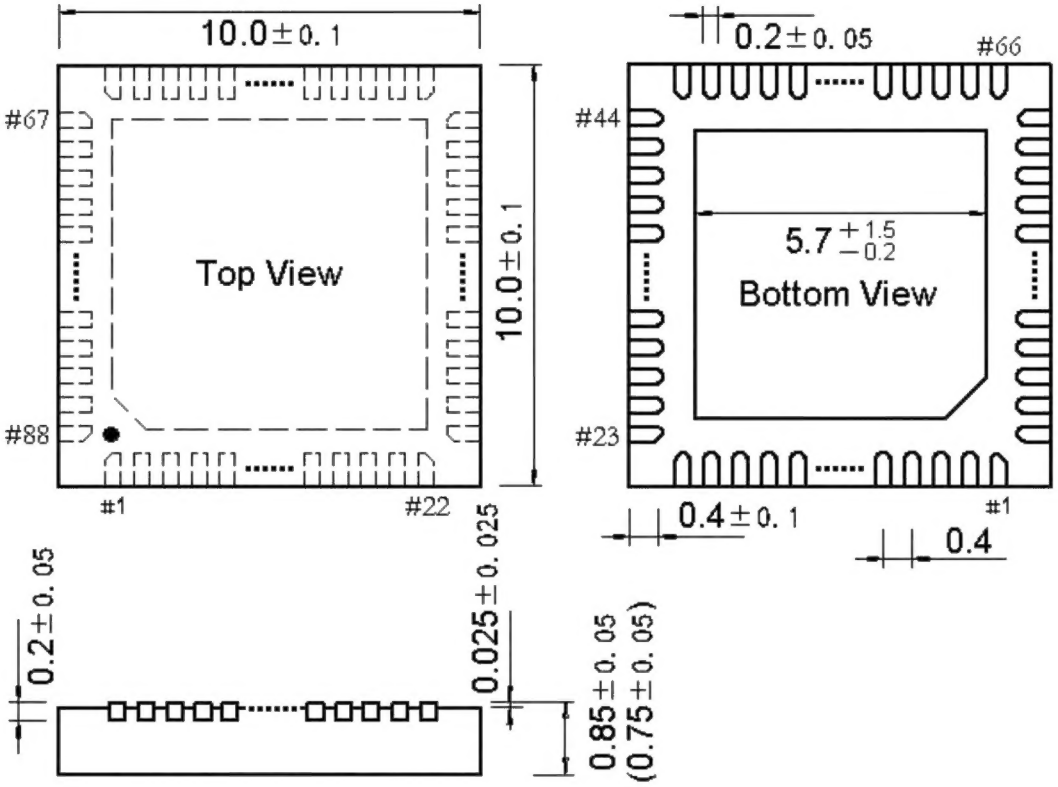

4.3 QFN68 package

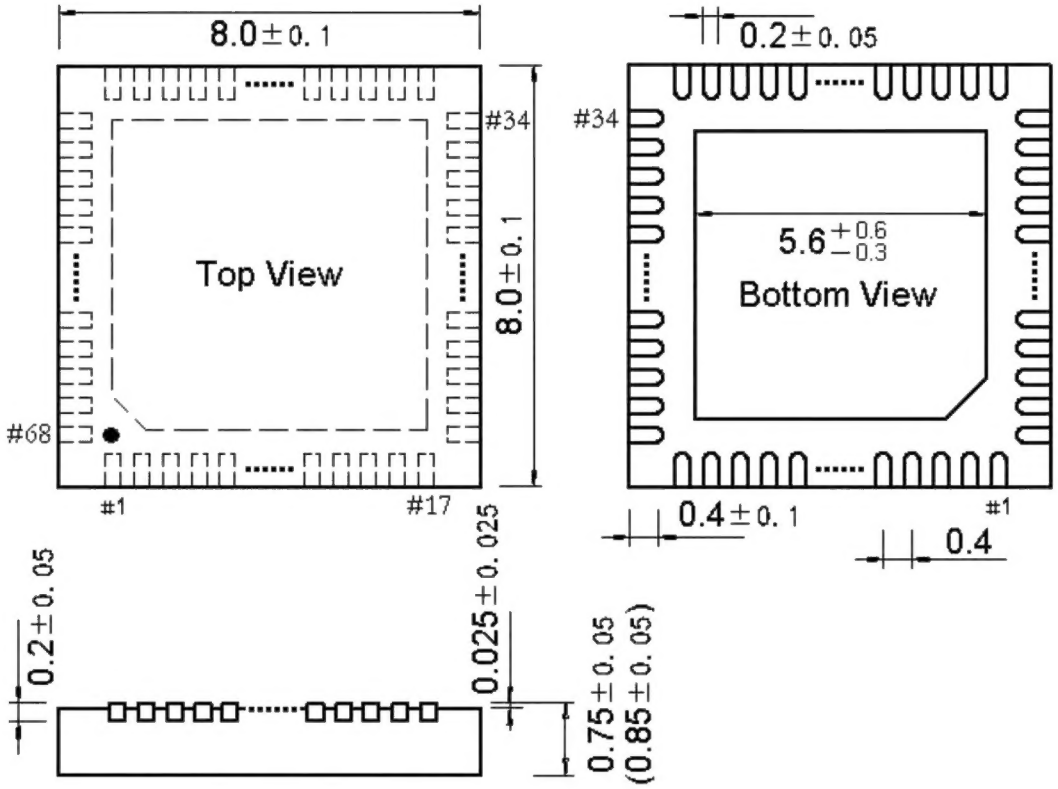

4.4 QFN60X6 package

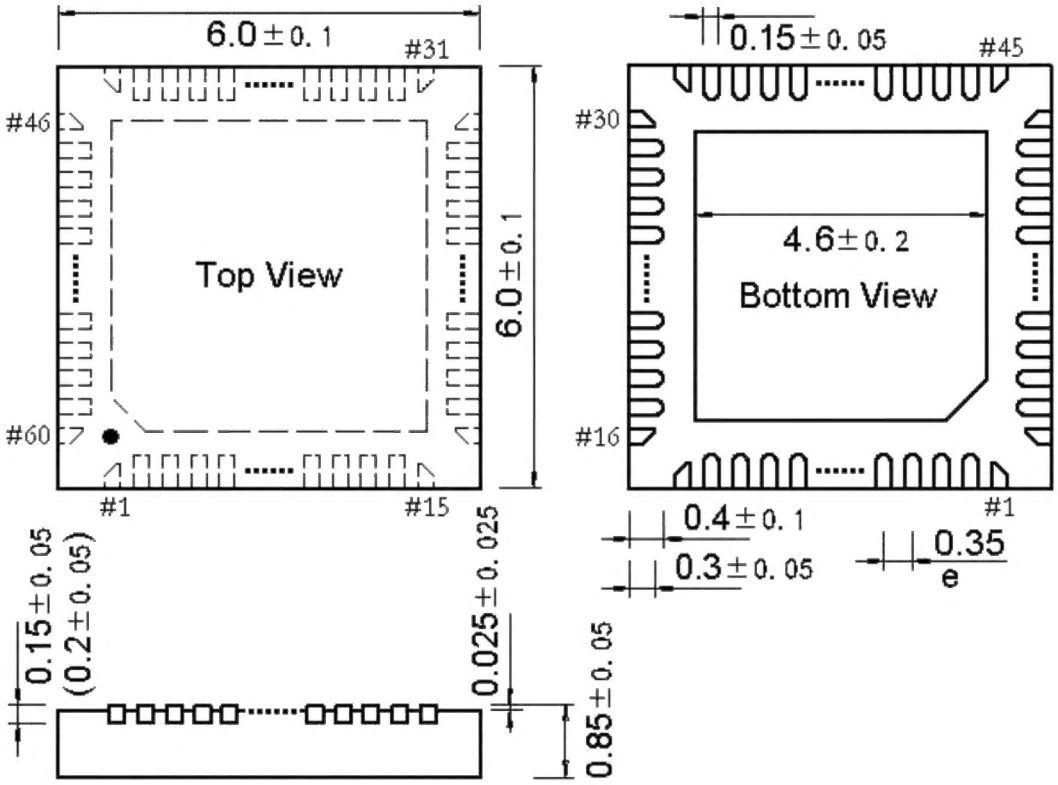

Series Product Naming Rules

Example: CH32 V 303 R 8 T 6

Product Series

F = Arm core, general-purpose MCU
V = QingKe RISC-V core, general-purpose MCU
L = QingKe RISC-V core, low-power MCU
X = QingKe RISC-V core, dedicated or special peripheral MCU
M = QingKe RISC-V core, Built-in gate drive motor MCU
H = QingKe RISC-V core, high-performance MCU

Product type (*)+Product sub-series (**)

Product type	Product sub-series
0 = Value version, main frequency <=48M	06 = 64K Flash multi-function general-purpose type, OPA, dual-purpose, TKey 07 = Basic motor application type, OPA+CMP
1 = Basic version, main frequency <=100M 2 = Enhanced version, main frequency <=200M 3 = Hardware floating point, medium and large capacity <480KB	03 = Connected, USB 05 = Connected, USB HS, CAN 07 = Interconnected, USB HS, CAN, Ethernet, SDIO, FSMC 08 = Wireless, BLE5.x, CAN, USB, Ethernet 17 = Interconnected, USB HS, CAN, Ethernet (Built-in PHY), SDIO
4 = Hardware floating point, large capacity >=480KB	15 = Interconnected, USB HS, HSADC 15 = Interconnected, USB HS, HSADC, SDMMC 17 = Interconnected, USB SS, SerDes, HSADC, UHSIF, SDIO, DVP, SDMMC, Ethernet (Built-in PHY)

Pin number

J = 8 pin D = 12 pin A = 16 pin F = 20 pin E = 24 pin
G = 28 pin K = 32 pin T = 36 pin C = 48 pin R = 60&64 pin
W = 68 pin M = 88 pin V = 100 pin Q = 128 pin Z = 144 pin

Flash memory capacity

4 = 16K Flash memory 6 = 32K Flash memory 7 = 48K Flash memory 8 = 64K Flash memory
B = 128K Flash memory C = 256K Flash memory D = 480K Flash memory E = 512K Flash memory

Package

T = LQFP U = QFN R = QSOP P = TSSOP M = SOP

Temperature range	
6 = -40°C~85°C	7 = -40°C~105°C
3 = -40°C~125°C	D = -40°C~150°C